NOVA Anchor Truck Lock™

INSTALLATION PARTS & OWNER'S MANUAL

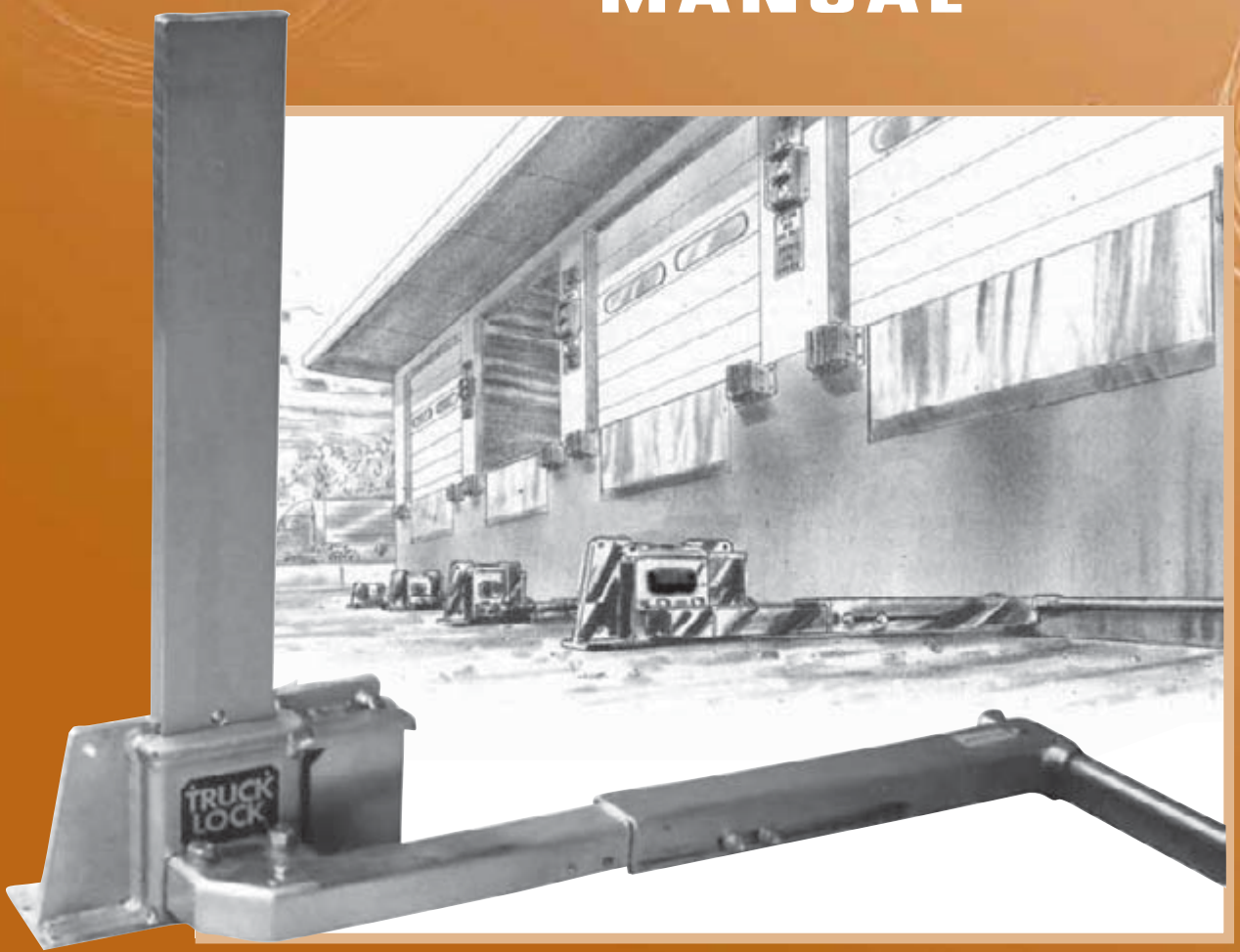

NOVA TECHNOLOGY™

CATALOG NO. TL10

SAFETY WARNINGS:

Lockout/Tagout Procedures

The Occupational Safety and Health Administration (OSHA) requires, in addition to posting safety warnings and barricade the work area (including, but not limited to, trucking office and loading docks), that the power supply and air supply, if applicable, has been locked in the OFF position or disconnected. It is mandatory that an approved lockout device is utilized. The proper lockout procedure requires that the person responsible for the repairs is the only person who has the ability to remove the lockout device.

In addition to the lockout device, it is also a requirement to tag the power control and air control, if applicable, in a manner that will clearly not that repairs are under way and state who is responsible for the lockout condition. Tagout devices have to be constructed and printed so that exposure to weather conditions, or wet and damp locations, will not cause the tag to deteriorate or become unreadable.

Nova Technology does not recommend any particular lockout device, but recommends the utilization of an OSHA approved device and procedures (refer to OSHA regulation 1910.147). Nova Technology also recommends the review and implementation of an entire safety program for the Control of Hazardous Energy (Lockout/Tagout). These regulations are available through OSHA publication 3120.

⚠ DANGER

This is the highest level statement. Failure to follow the listed instructions will most likely result in severe injury or death.

⚠ CAUTION

The statements used with this level of warning deal with a safe operating procedure. If the procedure is ignored, the possibility of personal injury may exist.

⚠ WARNING

This is a statement of serious hazard. Failure to follow the listed instructions could place the individual at risk of serious injury or death.

IMPORTANT

Important is used to draw attention to a procedure that needs to be followed to prevent machine damage.

NOVA TECHNOLOGY™

INTRODUCTION

The NOVA Technology Anchor Truck Lock™, when properly installed and operated, offers the user substantially improved dock safety and efficiency. Its design is the result of many years of experience with loading dock operation.

It features an easy to read inside light system for the dock attendant, a simple "STOP & GO" outside light system for the truck driver, and a restraining device to discourage premature or unexpected truck departure.

Read and follow all installation and operating instructions. Be certain to read and understand all caution statements in this booklet as well as all warning labels on the equipment. Be sure all dock attendants are properly trained in the system's function and operation.

Perform periodic inspection to insure there are no worn or damaged parts which could result in equipment failure and/or personal injury.

INDEX

WARRANTY

NOVA TECHNOLOGY INT'L, LLC. warrants the NOVA ANCHOR TRUCK LOCK™ to be free of defects in material or workmanship under normal use for a period of one year from the date of shipment. This warranty does not cover any failure to properly maintain the product. This warranty is the only one given by NOVA TECHNOLOGY INT'L, LLC. and is in lieu of all guarantees and warranties expressed or implied by anyone other than NOVA TECHNOLOGY INT'L, LLC. including those of fitness for a particular purpose and merchantability. In order for warranty claims to be honored the products must have been properly installed, maintained, and operated within their intended function and not otherwise abused.

If your NOVA ANCHOR TRUCK LOCK™ is defective in material or workmanship and you notify NOVA TECHNOLOGY INT'L, LLC. within one year of the date of shipment, NOVA TECHNOLOGY INT'L, LLC. will, at its option, repair or replace the defective component(s) at no cost to you.

NOVA TECHNOLOGY INT'L, LLC. will not be responsible for or pay for loss of time, inconvenience, loss of the use of the product, or property damage caused by this product or its failure to work, or any other incidental or consequential damages.

NOVA TECHNOLOGY INT'L, LLC. reserves the right to change specifications or make product improvements without notice or obligation.

⚠ CAUTION **Be sure that installation is performed only by qualified personnel and that electrical hook-up is performed by a qualified electrician.**

This view shows typical arrangements and functions of major components for the NOVA Anchor Truck Lock™

- Review Distributors' survey sheet
- Verify that the Data Corresponds to your job site requirements

INSIDE LIGHT. "RED" indicates that it is not safe to enter the truck. "GREEN" indicates that the truck has been restrained.

RAM ACTIVATION HANDLE. Handle in "RELEASED" position — ram is lowered (stored) and outside "GREEN" light is flashing. Handle in "RESTRAINED" position — ram is raised and outside "RED" light is flashing.

OUTSIDE TRUCK CONTROL LIGHT. Shows "GREEN" if truck can safely back in or pull out. Shows "RED" while truck is restrained.

MECHANICAL TRUCK RESTRAINT AND HOUSING. Ram rises in front of truck's ICC BAR to restrain forward truck movement.

INSTALLATION INSTRUCTIONS

Every installation should be a show piece and potential customer reference. Please follow these instructions and the info on the survey sheet.

STANDARD SUPPLIES (per unit) furnished by INSTALLER.

- Assorted Concrete Fasteners
- 3/4" Thinwall Conduit — 20 ft. (Activation Cable Run)
- 1/2" Thinwall Conduit — 20 ft. (Truck Sensor Run)
- 1/2" Conduit Elbows (Two) (Truck Sensor Run)
- 1/2" Wall Clips (for conduit) (Truck Sensor Run)

NOTE: If sensor switch kit is purchased, install sensor switch housing prior to pouring concrete

Nova Technology requires NOVA Juice-E to be used on all new truck restraints. Failure to follow instructions will result in a voided warranty.

Step 1

Determine exact location of restraint ram housing per diagram. Figure 1.
Dimensions are from face of dock bumpers.
If bumpers are not yet installed, add thickness of bumpers.

CAUTION: When unpacking the Nova Lock be careful not to lose parts that are within the specially made packing boxes.

NOTE: Drawing is NOT to scale.

Figure 1

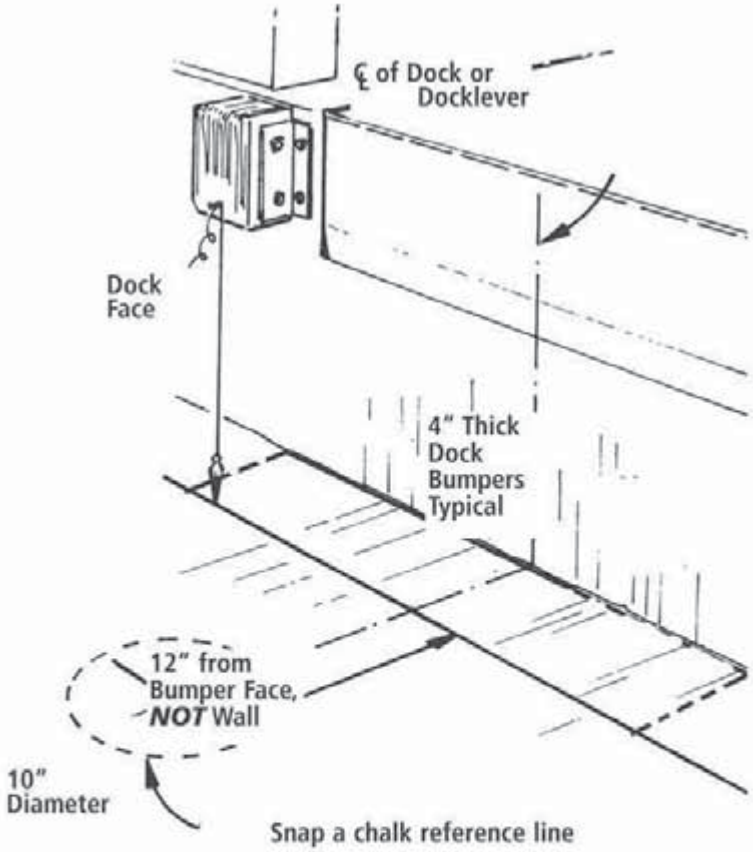

Step 2

Core drill (auger, posthole digger, etc.) a 10" diameter hole minimum of 30" deep. The final shape of completed excavation depends on driveway surface.

IMPORTANT: FRONT SUPPORT MUST BE IN FULL CONTACT WITH THE POURED CONCRETE.

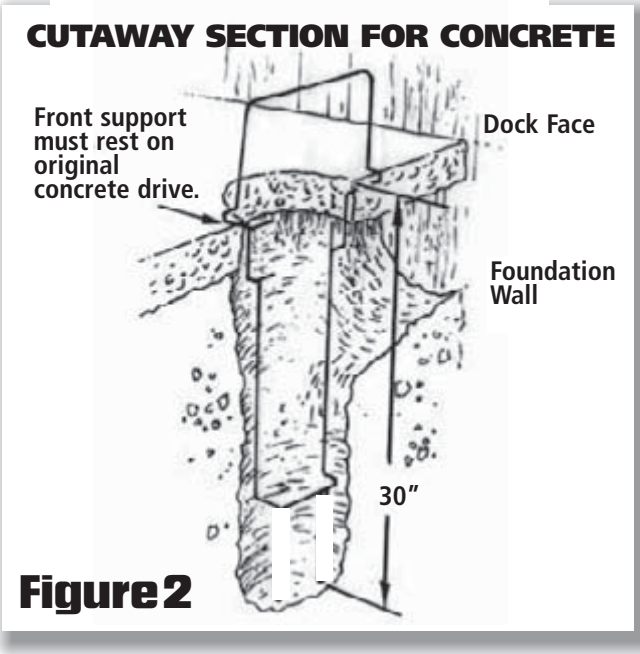

Figure 2

For non-concrete driveway surface, an area as shown must be cut out. This yields a much more substantial base since asphalt is subject to some movement climatically. See Figure 3 for placement of rebars when installing in non-concrete drive.

NOTE: Housing may be welded to the middle two rebars to help hold and stabilize housing during concrete pour.

Figure 3

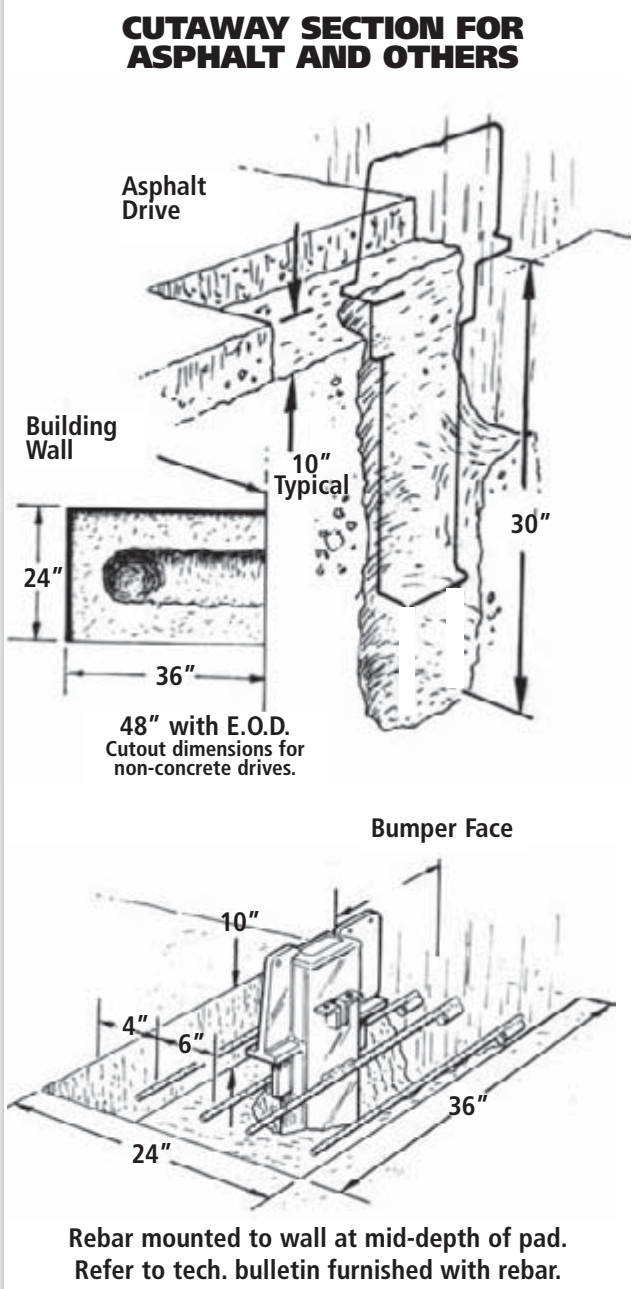

Rebar mounted to wall at mid-depth of pad. Refer to tech. bulletin furnished with rebar.

IMPORTANT: REMEMBER, DIMENSION FROM BACKEDGE OF RAM TO BUMPER FACE SHOULD BE 10".

While the concrete is setting up, you now can proceed with the mounting of brackets and console.

NOTE: Be sure there are no obstructions on outside of building which would interfere with cable run between control console and ram housing. Position control console so that activation cable clears dock bumpers. Also be sure that there is adequate clearance for future installation of dock seals or shelters. See Figure 4.

!WARNING!

Prior to installation of actuation cable, make sure concrete has set-up, or else cable force may loosen housing in concrete.

Step 4

Remove cover from control console by removing four 3/8"x1/2" bolts. See Figure 5.

If metal building support is required as per survey sheet, follow those instructions for correct installation.

Step 5

Temporarily place control console (with cover removed) against inside wall in desired location. Mark the four mounting holes for the console (two on wall and two on floor) as well as the 1" diameter cable exit hole. See Figure 6.

WARNING! GET THIS PART RIGHT TO AVOID CABLE RUBBING BETWEEN PULLEYS.

1. **CABLE MUST RUN ON PULLEYS.**
2. **CABLE MUST RUN LINE OF SIGHT BETWEEN PULLEYS.**
3. **CABLE MUST NOT RUB ON WALL MATERIAL.**

Step 6

■ First, drill the 1" diameter cable exit hole through the wall from the inside at the location marked in Figure 6.

Replace bracket and check alignment of the 1" hole per Figure 6 — then drill mounting holes.

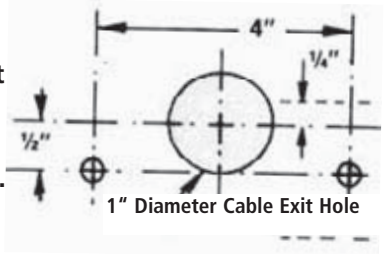

NOTE: To prevent outside concrete wall from chipping, drill a 1/2" pilot hole first. If into a block wall, loose insulation, etc., sleeve the hole with a section of 3/4" conduit.

Figure 4

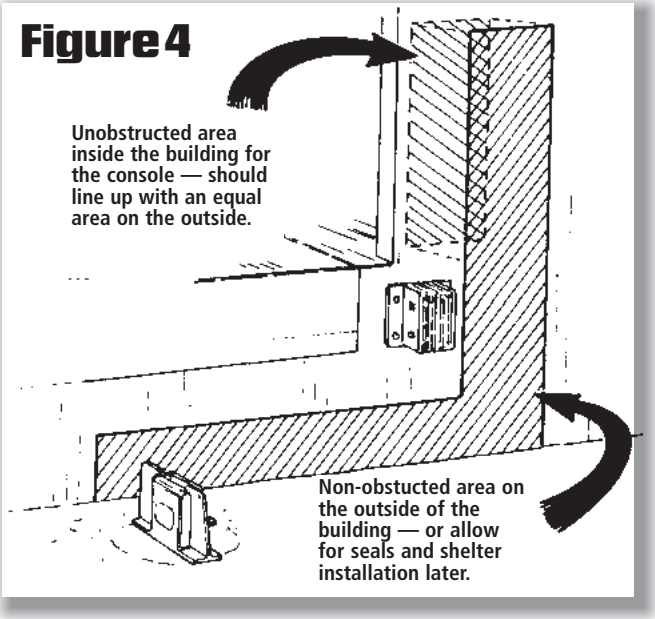

Figure 5

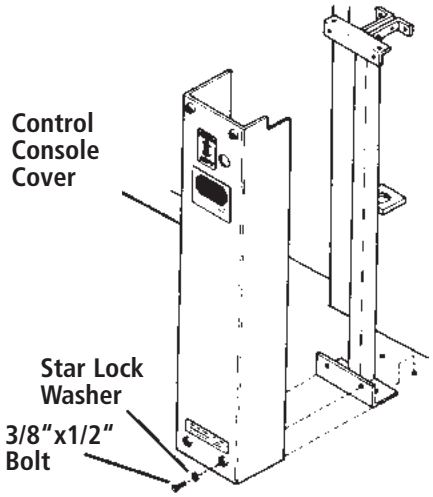

Figure 6

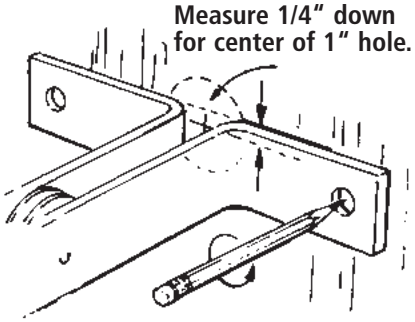

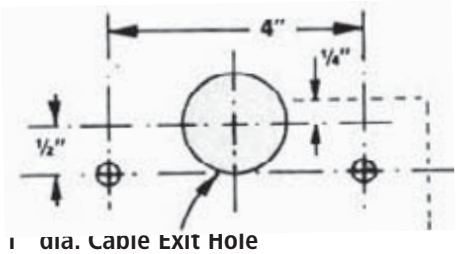

1" dia. Cable Exit Hole

Step 7

Replace console pole and check alignment of the 1" hole per Figure 6. Then drill mounting holes. Mount control console on inside of building wall.

NOTE: Use expansion bolts, toggle bolts or through bolts as appropriate. Bolts and fasteners supplied by installer.

Step 8

Mount upper pulley to exterior wall, being sure top of pulley aligns with center of 1" hole through wall. See Figure 7 and note regarding anchors above.

Step 9

Route cable through side extension bracket, and bolt side extension bracket to housing as shown in Figure 8. Route cable through tail section and bolt tail section to the side extension bracket as shown in Figure 8.

NOTE: Recessed building wall or dock foundation wall may require a special bracket as per your survey sheet.

Step 10

Mount lower pulley swivel assembly to foundation directly beneath upper pulley assembly. In northern climates, where driveway heaving (freezing) is possible, the lower pulley swivel bracket may be installed 2-3" above the drive. See Figure 9.

Figure 7

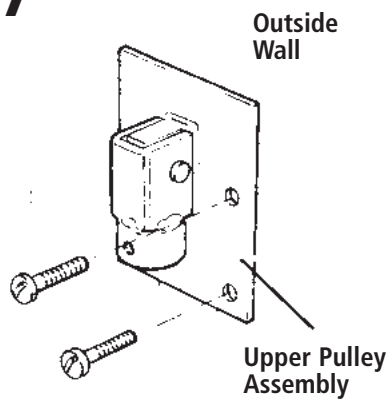

Figure 8

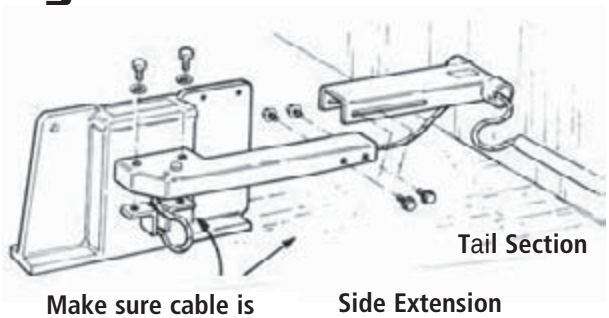

Figure 9

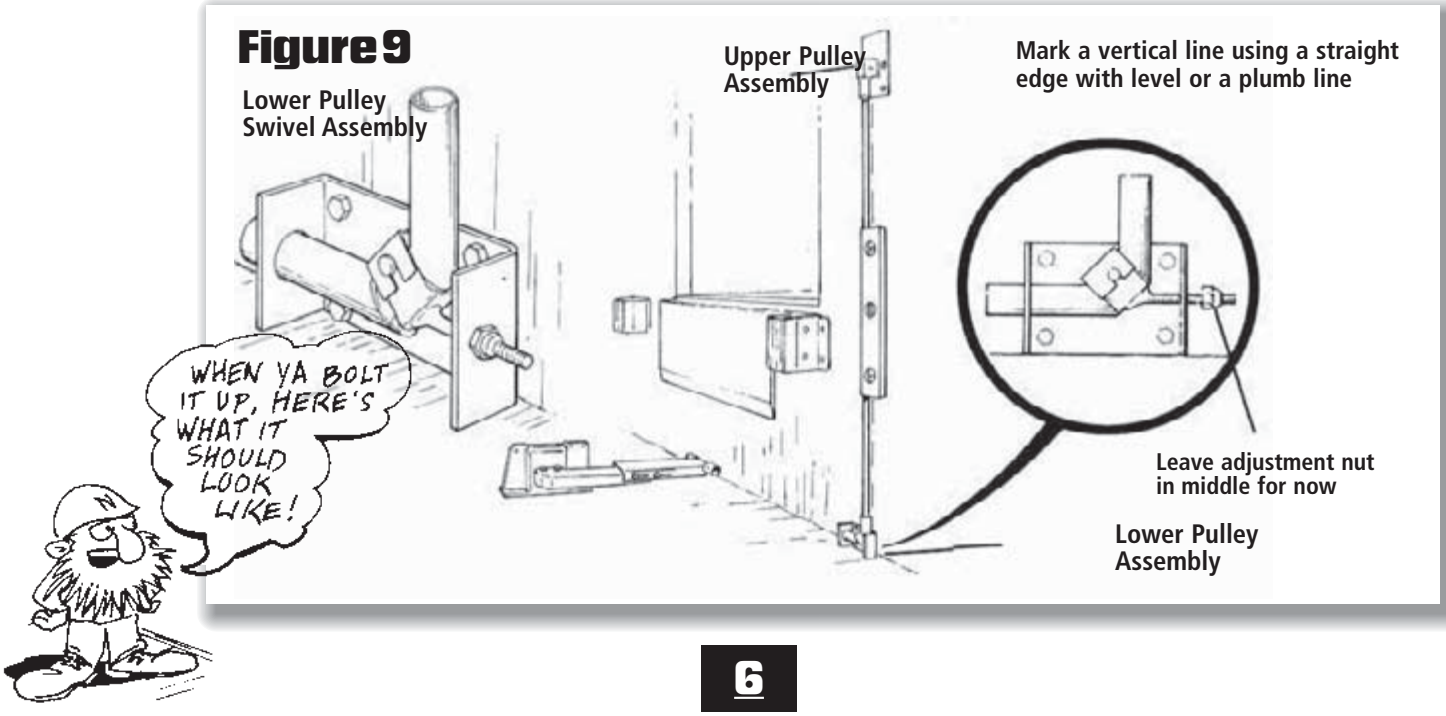

IMPORTANT:

Step 11

•Remove ram from housing and carefully pour in 2 quarts (8 cups) of Nova Juice-E. See figure 9.

Step 12

Measure distance between conduit collar on upper pulley bracket and conduit collar on lower pulley swivel bracket and add 2 - 3/4". Cut a piece of 3/4" thin wall conduit to this length. See Figure 10.

Step 13

Measure distance from conduit collar on lower pulley to conduit collar on ram housing assembly and add 2-3/4". Cut 3/4" thin wall conduit to length as above. Slide end into tube on lower pulley. Thread cable through lower and upper pulley assemblies.

Allow free cable end to stick out of conduit at top pulley. Do not attempt to feed through building wall at this time. Slide end of conduit into conduit collar on ram housing and secure with set screw. See Figure 10.

Step 14

Route ram cable around top of upper pulley, into building through hole in wall, and over the pulley between wall bracket on control console. See Figure 11.

Figure 9A

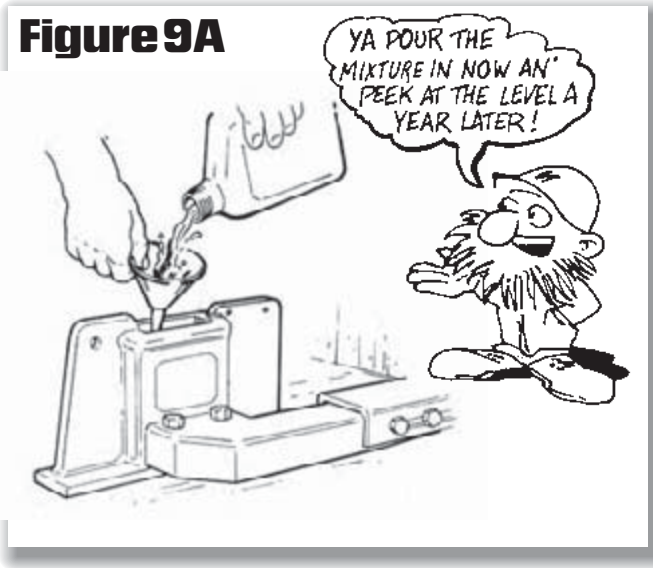

Figure 10

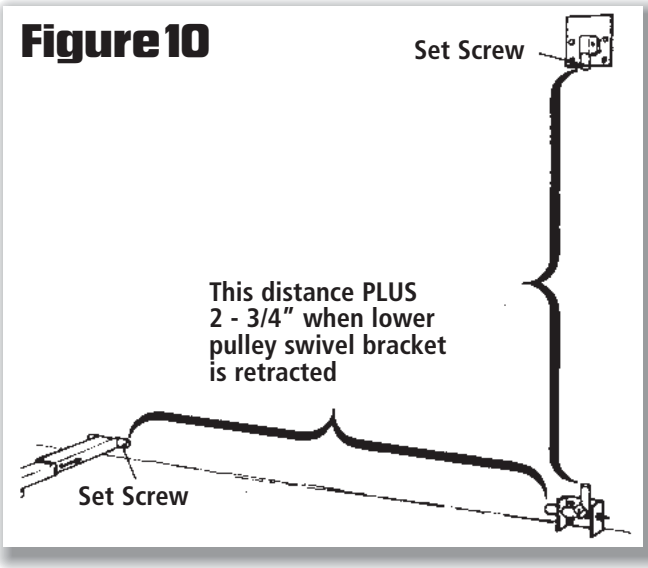

Figure 11

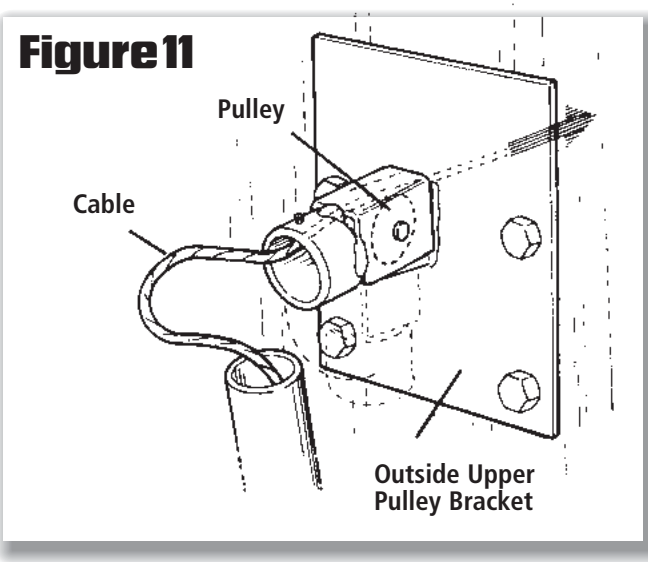

THE FOLLOWING SECTION

PAGES 8-12 OF THIS MANUAL ARE FOR INSTALLATION OF MANUAL TRUCK RESTRAINTS (MODELS 100M, 101M).

If you are installing a pneumatic unit (201P), please proceed to Pages 13-17.

Step 1M

Raise handle to full up position. Make sure upper limit switch lever is contacting Activation Handle Tube. Pull cable tight and attach to spring using cable clamp. See Figure 12.

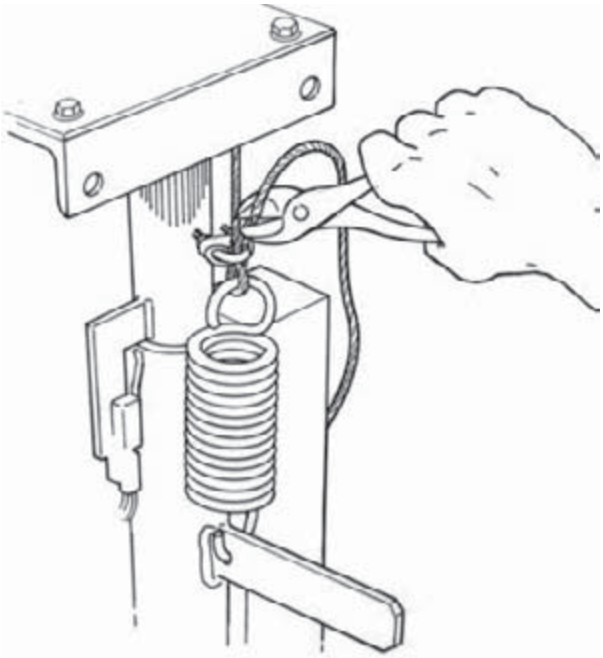

Figure 12

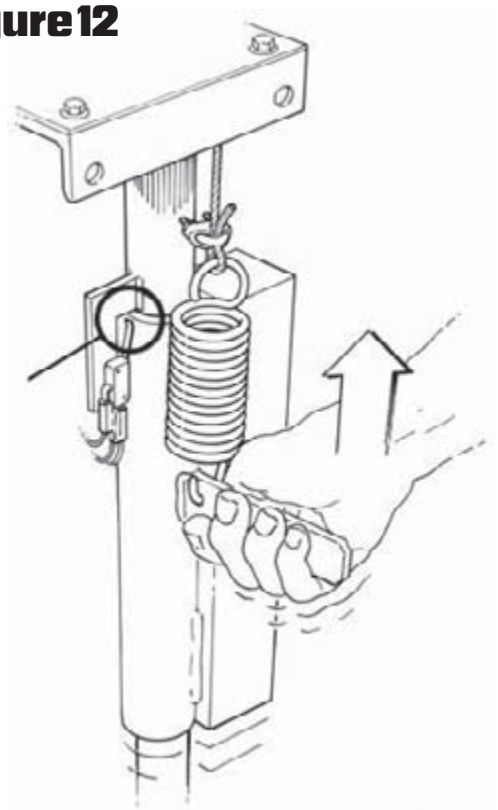

Step 2M

Determine location of outside light on exterior of building. Light must be on truck driver side of dock door (right side when facing dock from outside) and 8' above surface of drive. Be sure location of light will not interfere with the future installation of dock shelters or seals. Drill hole through wall at approximate center of light. Feed wire from light through hole in wall and affix light to wall. See Figure 13.

Figure 13

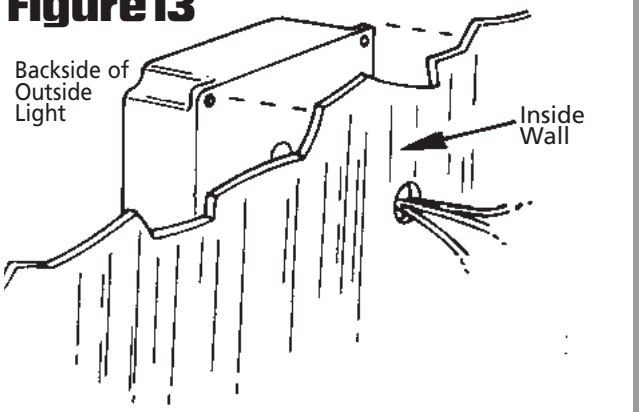

Step 3M

•Mount control box to wall 1" to 2" above console using fasteners supplied by installers. See Fig. 14

⚠ CAUTION

All control and lighting circuits are low voltage. Installation of 115V grounded supply circuit must conform to local electrical codes and customer specifications.

Figure 14

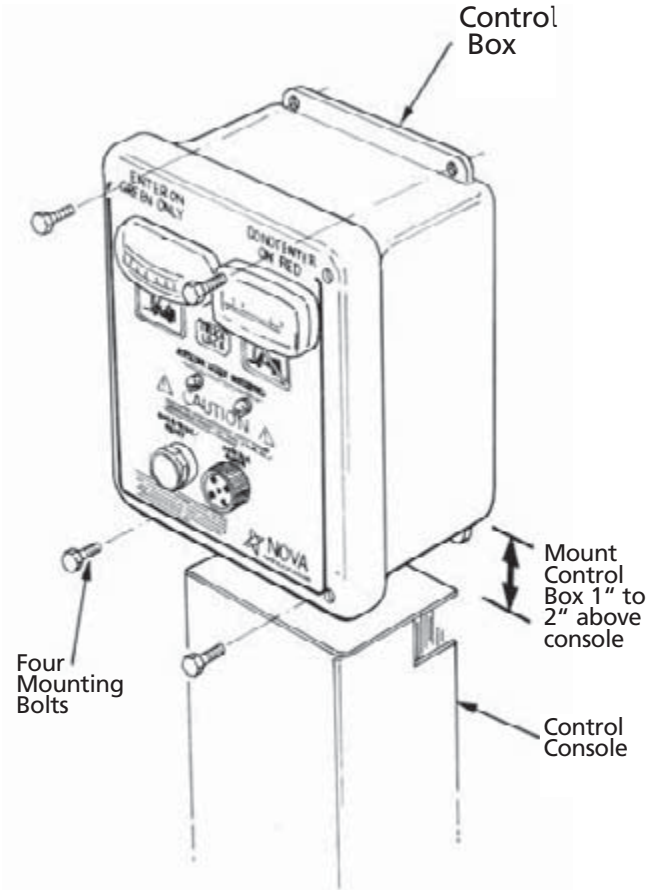

Step 4M

Fasten printed sign to outside wall, one above light, as shown in Figure 15. Attach sign to building with fasteners or acrylic based adhesive or mastic that won't attack styrene.

Figure 15

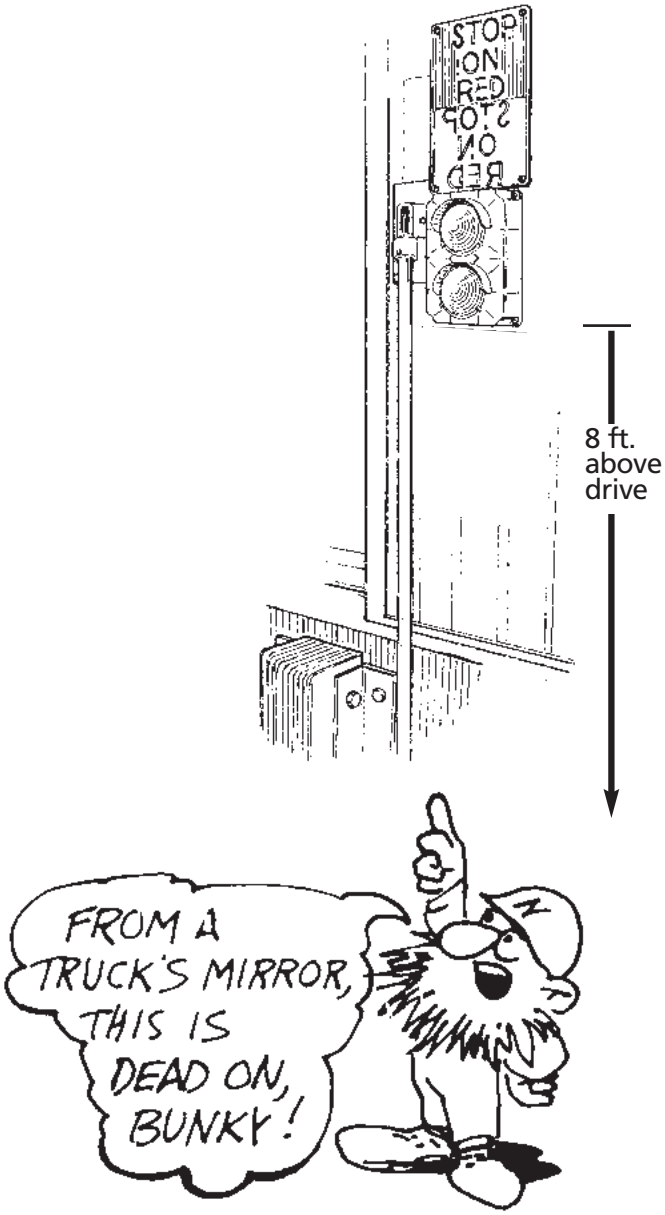

Step 5M

•Turn console cover around. Connect the (2) three-wire electrical cables from the control box to the limit switches, one mounted on the cover and the other mounted on the top of the slide pole.
See Figure 16.

Step 6M

•Route wire from outside light to inside control box through the grommeted hole in the bottom of the box. Cut to length and connect to terminal strip as shown in Figure 17.

Figure 15

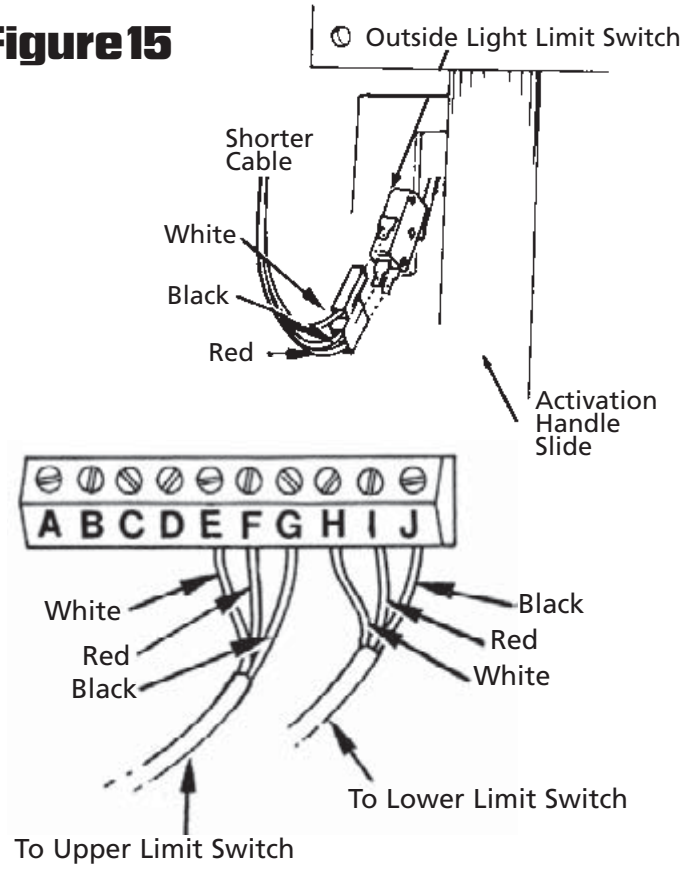

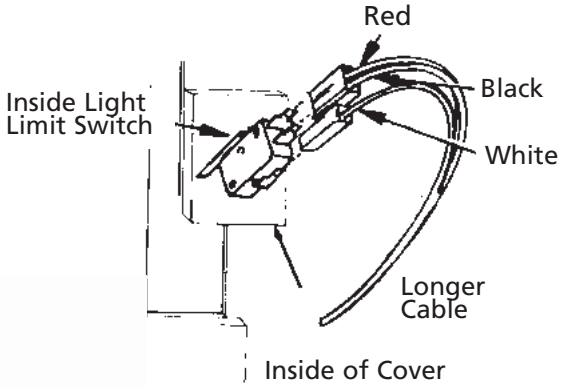

Figure 17

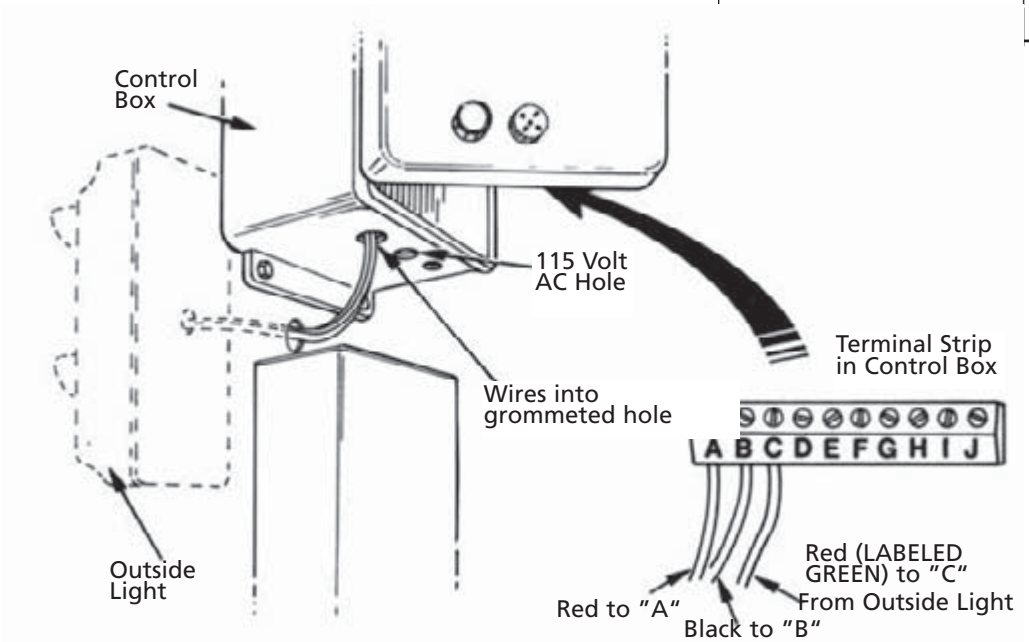

Step 7M

•Insert plug into wall receptical or hard wire per local codes.

Step 8M

Install remote box cover plate with (2) 1/4 - 20x1 bolts, nuts, washers and star washers.

Replace cover on control console and secure with four 3/8"x1/2" bolts and star lock washers. Slide plastic grip on to Activation Handle. See Figure 22.

IMPORTANT: MAKE SURE THAT WIRES FROM CONTROL BOX WILL NOT GET TANGLED IN ACTIVATION HANDLE, OR COUNTERWEIGHT ASSEMBLY ONCE CONSOLE IS REPLACED

Figure 22

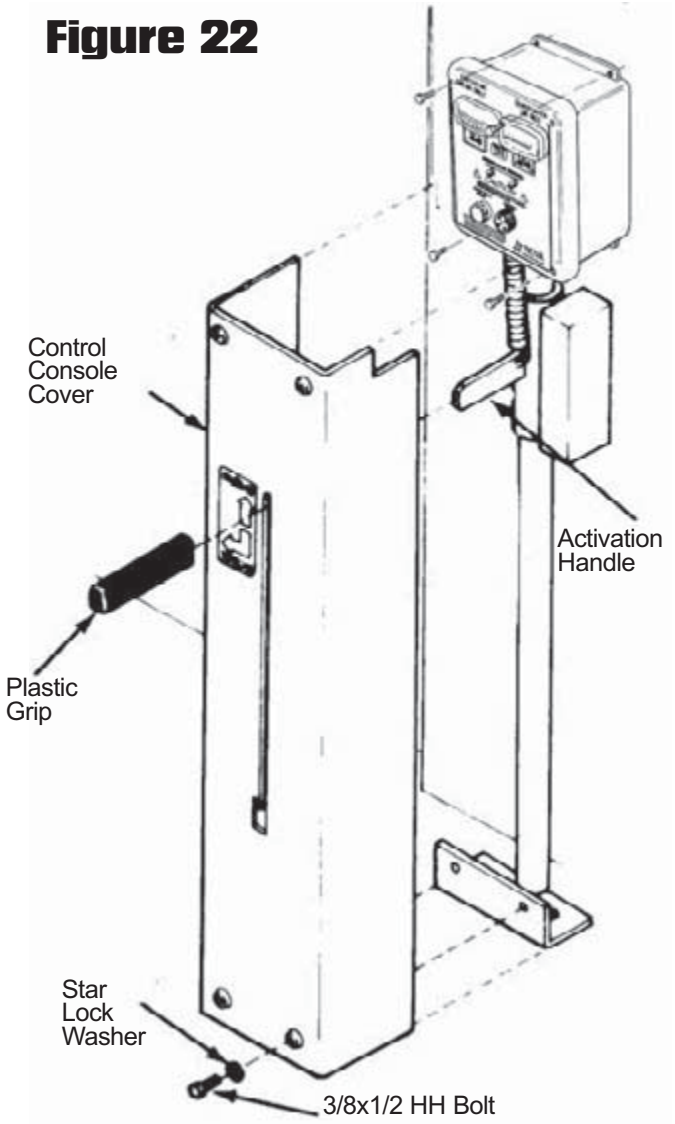

Step 9M

Move Activation Handle down into "Restrain" position which will raise restraint ram outside. Adjust ram height by turning nut on lower pulley assembly. Tighten cable until entire hole in ram is visible above top of ram housing. Do not overtighten as ram will not completely lower when handle is raised. See Figure 23.

Step 10M

Test entire restraint operation along with proper light sequence and make adjustments as necessary.

Figure 23

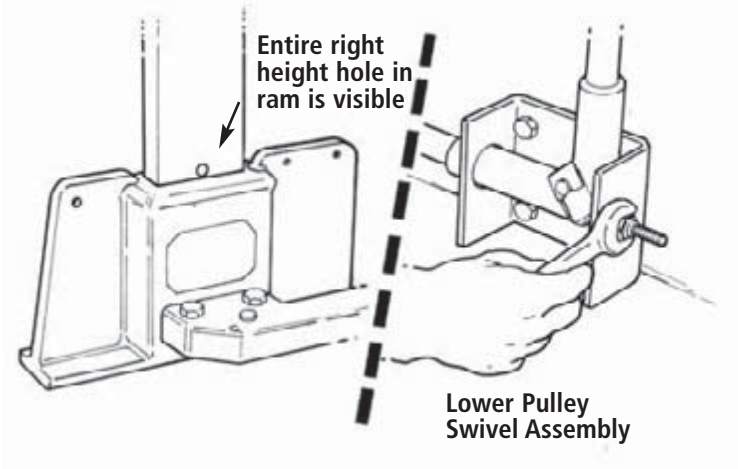

This completes the installation of a typical Manual System — turn to page 19 for important final checks

PAGES 12-15 OF THIS MANUAL ARE FOR INSTALLATION OF PNEUMATIC TRUCK RESTRAINTS (MODEL A201).

Step 1P

Manually extend air cylinder. Run end of cable through pulley at top of cylinder rod, pull cable tight, and attach end to clevis pin at top on control console frame using cable clamp supplied. See Figure 24. Cut off excess cable.

NOTE:

Pull cable only tight enough to remove all slack from cable. Do not pull so tight that you raise the ram from its resting position in the housing

Step 2P

Determine location of outside light on exterior of building. Light must be on truck driver side of dock door (right side when facing dock from outside) and 8 ft. above surface of drive. Be sure location of light will not interfere with the future installation of dock shelters or seals. Drill hole through wall at approximate center of light. Feed wire from light through hole in wall and affix light to wall. See Figure 25.

Figure 25

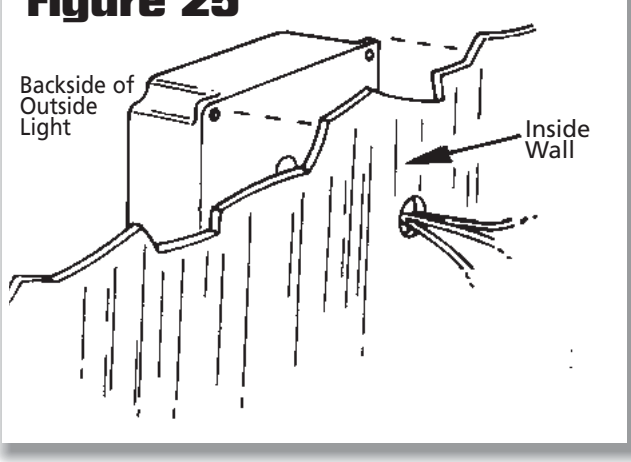

Figure 24

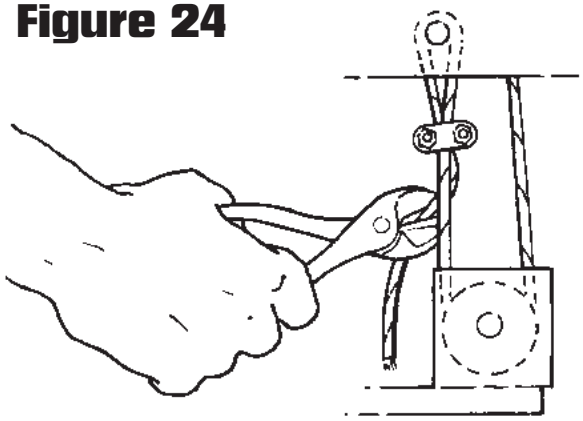

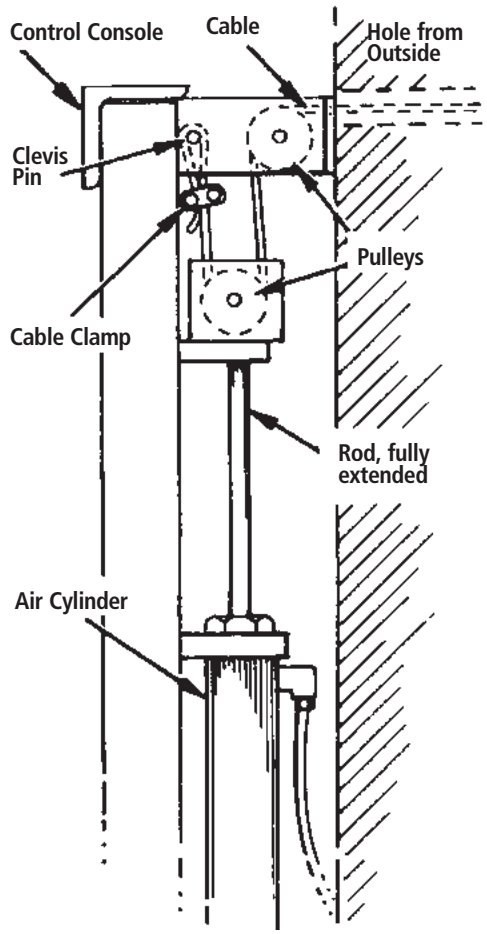

Step 3P

Fasten printed sign to outside wall, above light, as shown in Figure 26. Attach sign to building with fasteners or an acrylic-based adhesive or mastic that won't attack styrene.

Figure 26

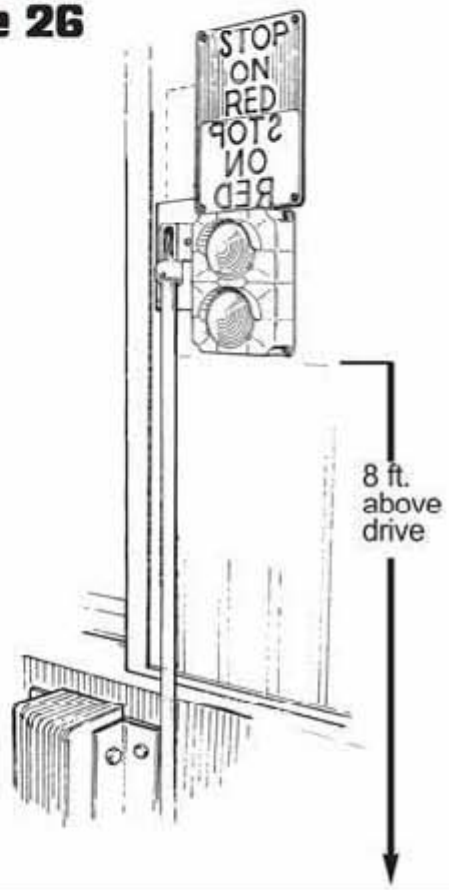

Step 4P

•Mount control box to wall 1" to 2" above console using fasteners supplied by installers. See Fig. 27

Figure 27

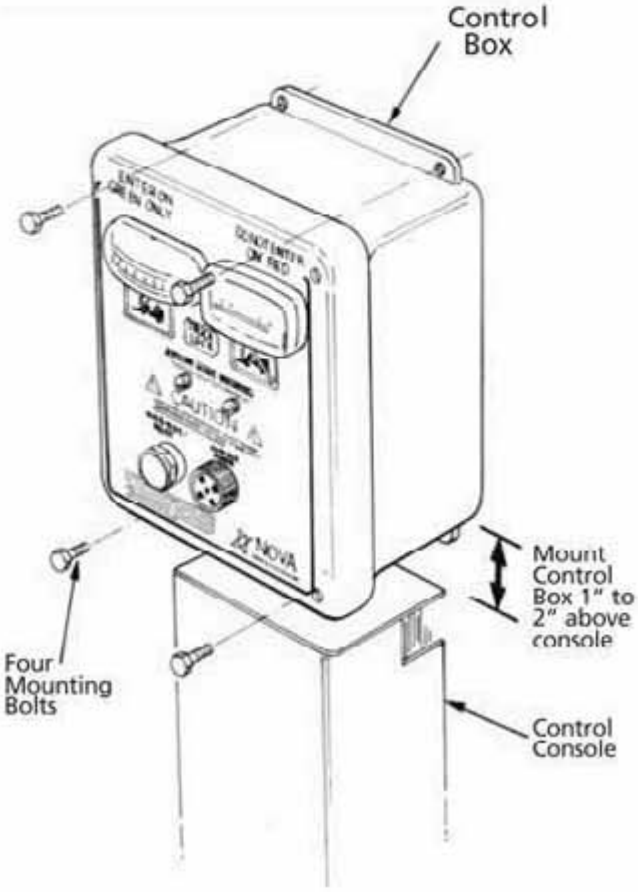

⚠ CAUTION

All control and lighting circuits are low voltage. Installation of 115V grounded supply circuit must conform to local electrical codes and customer specifications.

Step 5P

Connect the (2) three-wire electrical cables from the control box to the limit switches mounted on the console frame. See Figure 28.

After hook-up, check to make sure all wires clear the path of the rod end assembly.

Step 6P

Route wire from outside light to inside control box through the grommeted hole in the bottom of the box. Cut to length and connect to terminal strip as shown in Figure 29.

Figure 28

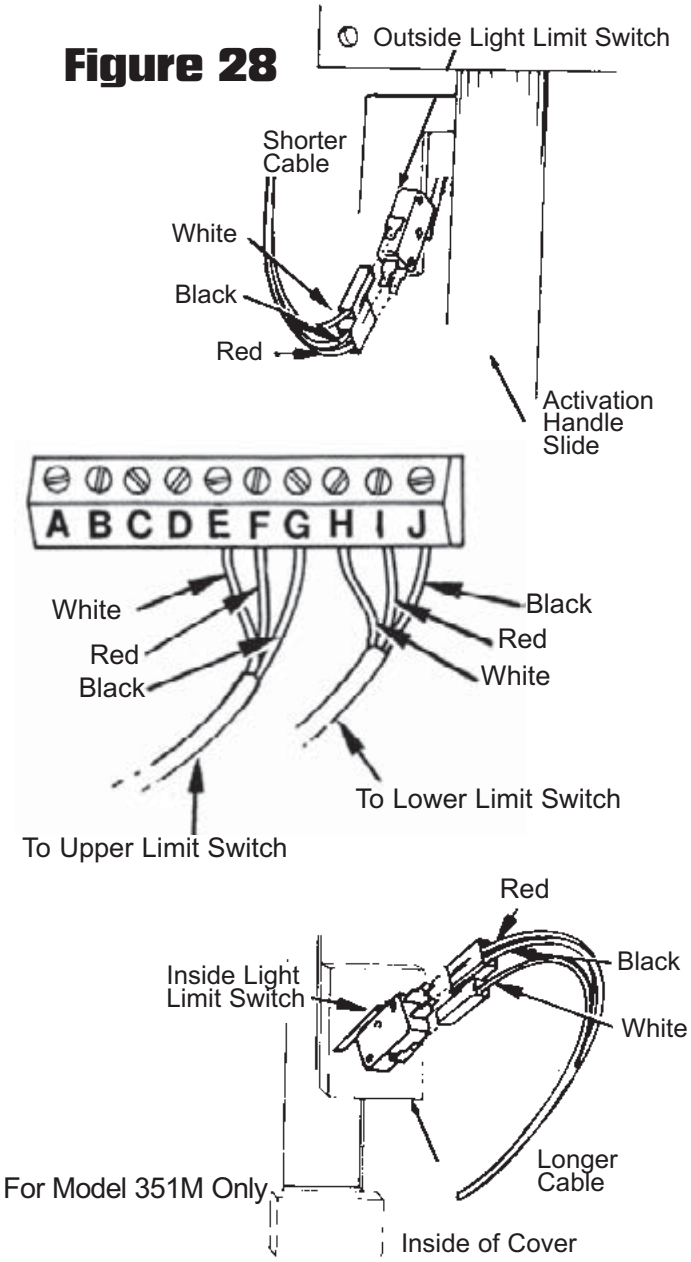

Figure 29

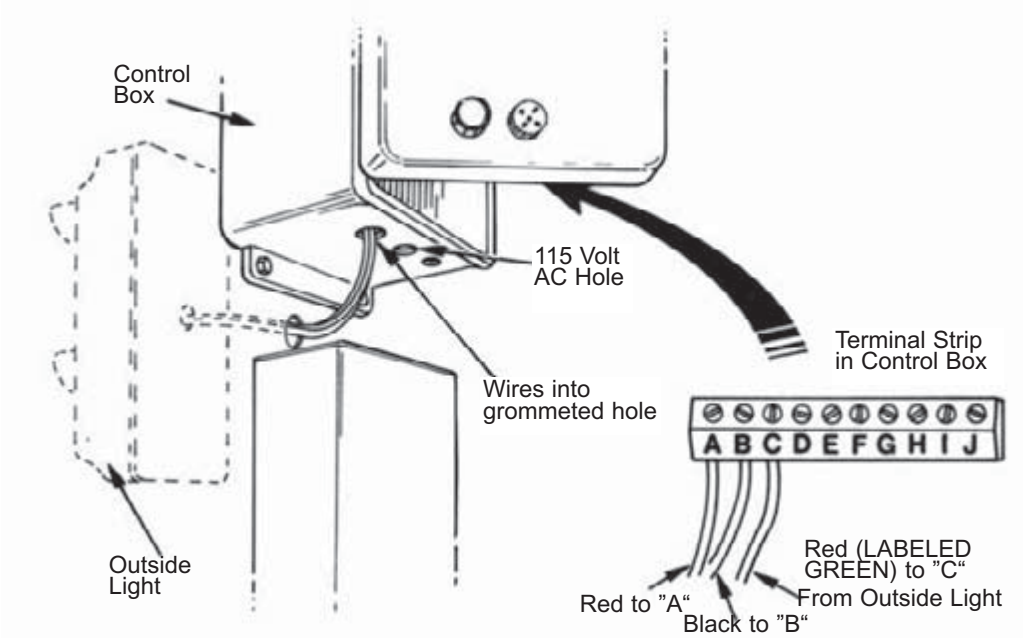

Step 7P

Plug control box into 120 VAC outlet or hardwire if required.

NOTE: Air may be supplied from plant system or by small compressor. Air must be minimum of 100 lbs./square inch and maximum of 130 lbs./square inch. Air must be dry and clean. Air usage is approximately .020 cubic feet per operation. Duration of normal power stroke is about 2 seconds.

Step 8P

Run 1/4" polyurethane tubing capable of withstanding 150 psi above dock doors as in Figure 37. Plot the tees to align with the console(s).

Step 9P

Run polyurethane tubing from header tee to control valve. Cut polyurethane tubing to allow for cover removal.

Step 10P

Connect short tube from control valve to quick connect on air cylinder.

Step 11P

Turn air supply on. Plug unit into 120 VAC outlet.

CAUTION: Be sure to keep hands clear of air cylinder, pulley assembly and cable when retracting cylinder. Personal injury could result.

Figure 37

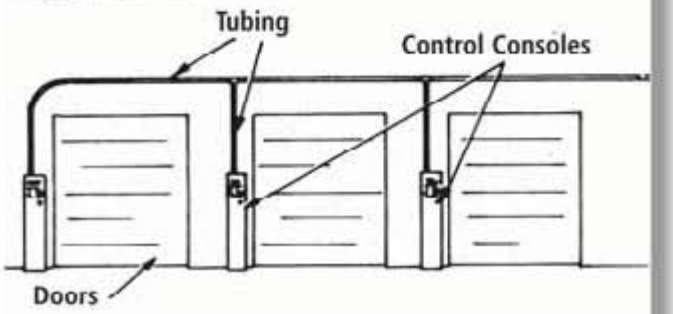

Steps 1 IC-3 IC applies only to Model A201P w/Interconnect

Step 1 IC

•Mount the limit switch under the dock board as shown in Figure 24. (Limit switch may also be used in conjunction with the overhead door.)

Figure 24

Switch is mounted in such a manner so that when dock lip is at a 45° angle, switch should click and system is activated.

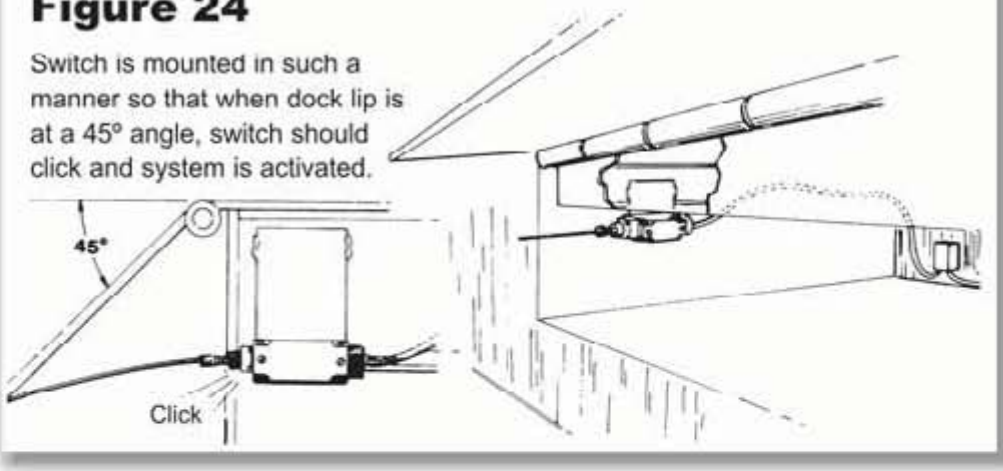

Step 2 IC

•Route wire from limit switch into control box through the grommeted hole. Cut the wire to length and connect to the terminal strip as shown in Figure 25. Black to "Q", Red to "R".

Step 3 IC

•Route wire from solenoid valve into control box through the grommeted hole. Cut the wire to length and connect to the terminal strip as shown in Figure 25. Black to "S", Black to "T". (Either black wire in either position will work.)

Figure 25

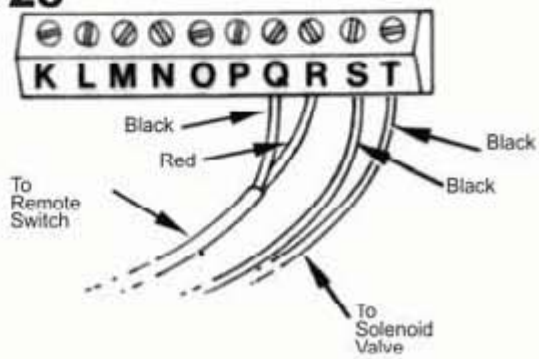

Step 1S

•[For 101FM AND 201FP W/SENSOR SWITCH KIT ONLY]

•Attach sensor switch housing tube to gusset with tek screws or 1/4-20x1 HH screw.

Step 2S

•[For 101FM AND 201FP W/SENSOR SWITCH KIT ONLY]

•Insert switch and wire through fitting in switch housing tube and attach top with 1/4-28x3/8 BHCS

Step 3S

•[For 101FM AND 201FP W/SENSOR SWITCH KIT ONLY]

Install 1/2" thinwall conduit to shield sensor switch wire running to control box as shown in Figure 30.

Step 4S

•[For 101FM AND 201FP W/SENSOR SWITCH KIT ONLY]

Install truck sensor wand in wand holder. The bend in the wand should face away from the dock wall. Make sure the wand is inserted all the way to the bottom of the hole. Tighten set screw through clearance hole in the side of the housing as shown in Figure 31.

Step 5S

•[For 101FM AND 201FP W/SENSOR SWITCH KIT ONLY]

Uncoil wire from sensor switch and feed through flex conduit, run 3 cond. wire through the 1/2" conduit to control box and it's grommeted hole. Cut wire to length and connect to terminal strip as shown in Figure 32 diagram.

Figure 30

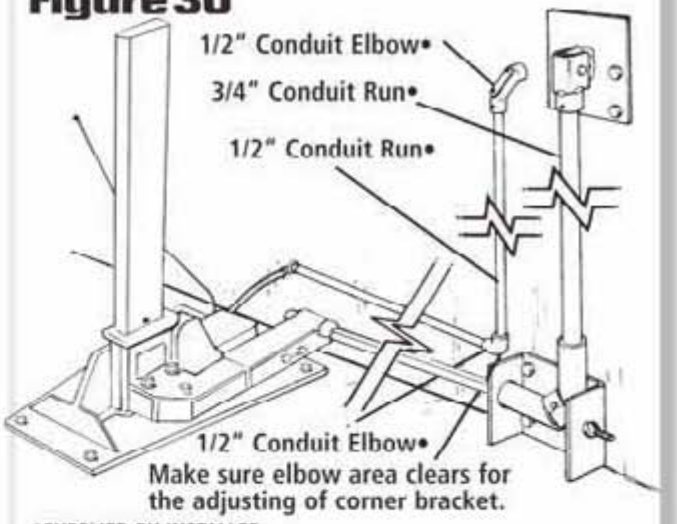

*SUPPLIED BY INSTALLER

Figure 32 Terminal Strip in Control Box

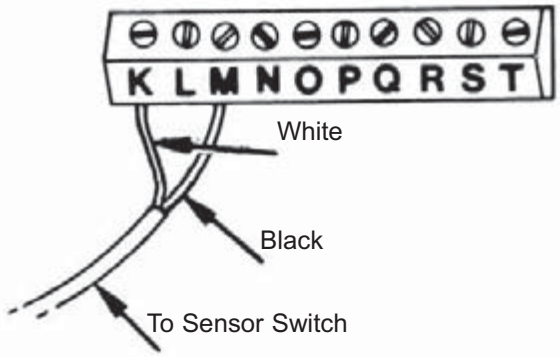

Step 12P

Install remote box cover plate with (2) 1/4 - 20x1 bolts, nuts, washers and star washers. Replace control console cover and secure with four 3/8"x 1/2" bolts and star lock washers.

Step 13P

Move control valve lever to up "RESTRAIN" position.

Step 14P

The unit is shipped with the needle valve 3/4 turn open.

Step 15P

Move control lever to "RELEASE" and lower ram.

NOTE: Lowering speed is not adjustable and is controlled by internal orifice.

Step 16P

Cycle unit again. Turn adjusting knob on needle valve out to increase rise speed and in to decrease speed. Continue to cycle unit until desired speed is obtained.

⚠ CAUTION

Adjusting needle valve so that ram rises too fast can cause unnecessary stress on the unit and may present danger to personnel or equipment.

NOTE: When properly adjusted, the ram should fully rise in 1 to 2 seconds. There should be less than 1/2" of "hop" by the ram at the end of the rise stroke.

Step 17P

Move control lever to "RESTRAINED" position. Adjust ram height by turning nut on lower pully swivel assembly. Tighten cable until right height hole in ram is just visible above top of ram housing. Cycle unit several times to check cable adjustment. See Figure 39.

⚠ CAUTION

If Ram does not completely lower, cylinder damage cound result and range of Truck Lock will be reduced.

Figure 39

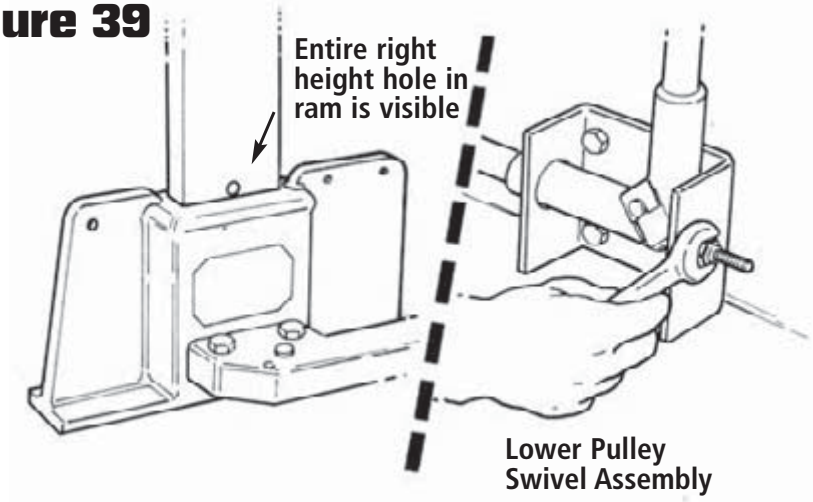

This completes the installation of a typical Manual System — turn to page 20 for important final checks

IMPORTANT CHECKS!

Remove ram from housing and carefully pour in Nova Juice-E. This provides lubrication and prevents freezing under normal operating conditions.

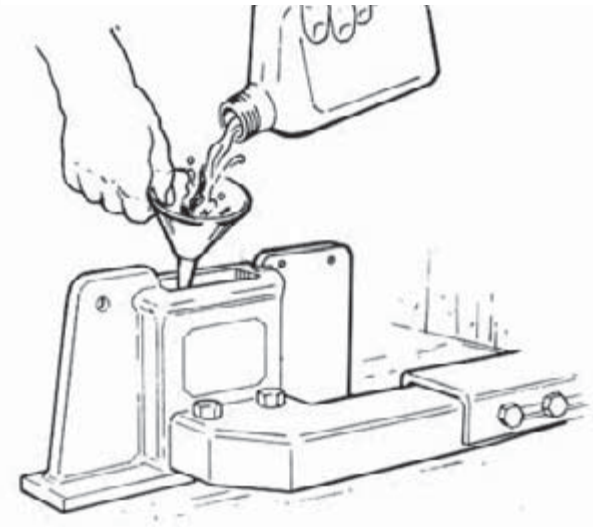

Adjust cable length by turning nut on lower pulley assembly. Tighten cable until entire guide height hole in ram is visible above top of ram housing. Do not overtighten as ram will not completely lower when lever is released.

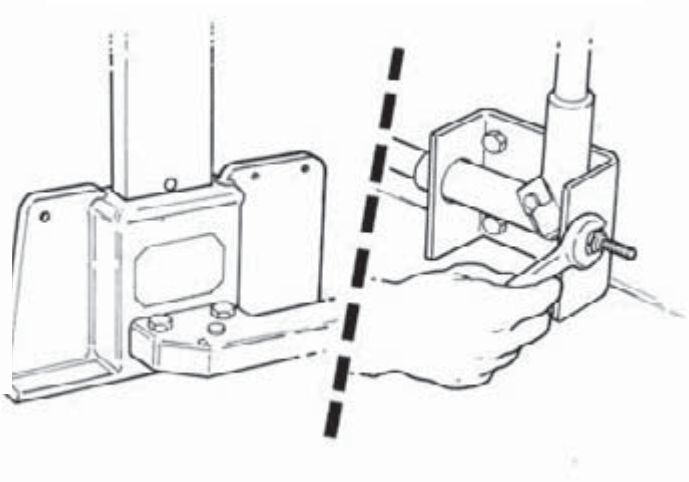

This completes the installation. Pack up tools, clean up any installation debris for a professional touch that's appreciated by the customer.

SUGGESTED TOOLS AND SUPPLIES
for installing and servicing Nova Truck Locks

Utility Knife
Tape Measure
Chalk or Marker for marking hole locations
120 Volt Power Source
Core Drill with water for coolant
10" Ø Core Bit
(2) 12" extensions for Core Bit
Post hole digger or auger to clean out hole
Rock Bar/Pry Bar and shovel
Torch to cut metal in the hole
Rotary Hammer Drill
5/8" x 12-16" long masonry bit (Flange Anchors)
1" x 12" long masonry bit (hole for cable)
1/2" x 6" long masonry bit (Outside Mount Angle)
Impact Wrench-torque capabilities of 75 ft-lbs with 3/4" and 15/16" impact sockets
Cement, water and mixer, wheelbarrow, pail (for Cast in place units)
Ram rod to agitate the concrete
Trowels to finish off the concrete
Hammer
1/2" Drill/Hammer drill
1/4" x 6" long masonry bit (Wall Brackets)
3/8" x 6" long masonry bit (Console Support, Console Feet and top, Control Box Mount, Outside Console Mount)
1/2" x 6" long masonry bit (Console Angle-Outside Mount Only)
Wrenches 3/8", 7/16", 1/2" 9/16", 3/4", 15/16",
Sockets- 3/8", 7/16", 1/2" 9/16", 3/4", 15/16",
Nut Driver-3/8"
Allen Wrenches 1/8", 5/32" ball end
Adjustable Crescent Wrench. Up to 1"
(2) 10' sticks of 3/4" thin wall Conduit
Level
Conduit/ Pipe cutter
File to clean burr after conduit is cut
6-8' stepladder
Funnel
Mini flat, Small, Medium and Large Screwdrivers Flat and Phillips
Side Cutter for cable
Duct Tape
Channel locks
Welder
Chrome Paint
Shim stock
(2) 10' sticks of 1/2" thin wall conduit (for Sensor Switch option)
5/16" transfer punch (for Sensor Switch option)
1/8" HSS twist drill bit (for Sensor Switch option)
3/8" square socket adaptor for drill (for Sensor Switch option)
3/8" socket with 3/8" drive (for Sensor Switch option)
Electrical Junction Box (for leveler interconnect option)

Concrete Anchors
(8) to (20) 1/4" or 5/16" x 2" long Nail Pin Anchors (Wall Brackets, Control
Box)
(12) to (31) 3/8 x 3-1/2 or 4" long Stud style anchors (Console Support,
Console Feet, Control Box Mount, Outside Console Mount, Open Dock Stanchion)
(5) 1/2" x4" long stud style anchors (outside mount option only)

Other Fasteners
1/4-20 x 1" Hex Head Bolts
1/4-20 Hex Nuts
1/4" washers and lock washers
3/16" washers
1/4 x1-1/4", 5/16 x 1-1/4", and 3/8 x 1-1/4" lag screws (for drywall or wood
interior walls)
1/4-14 x 1 tek screws

FOR SERVICING RESTRAINTS
The following tools are suggested in addition to the above:
Shop-Vac with a conduit adaptor to replace fluids in housing
Grease with applicator
Step drill or cone drill 1-3/16" Ø for valve replacement
Multi-meter for checking control Box
Wire stripper
Wire
Duct Tape

SUGGESTED SUPPLIES TO CARRY ON TRUCK WHEN SERVICING:
Cables
Light bulbs (Outside, Inside, LED) and lenses
Pulleys 1", 1-3/4", 2"
Nova Juice-E
Rotary Valve
Cylinder Ass'y 10" and 12"
Limit Switches
Sensor Switch Ass'y
Wands for limit switches

GENERAL MAINTENANCE

WARNING Be sure that main power to unit is locked out and tagged according to OSHA regulations and local codes prior to performing any maintenance or repair!

Daily

•Operate the TRUCK LOCK to assure it is in proper working condition. Replace damaged or missing light bulbs and lenses.

Every 180 Days

•Apply grease to slide pole or cylinder pole.
•Inspect slab around restraint for any cracks or imperfections.

Annually

•**ALL MODELS.** For best performance, remove old, used fluids (siphon, drill pump, shop vac) and replace with new mixture.
Replace all outside light bulbs.

Nova Technology requires NOVA Juice-E to be used on all new truck restraints. Failure to follow instructions will result in a voided warranty.

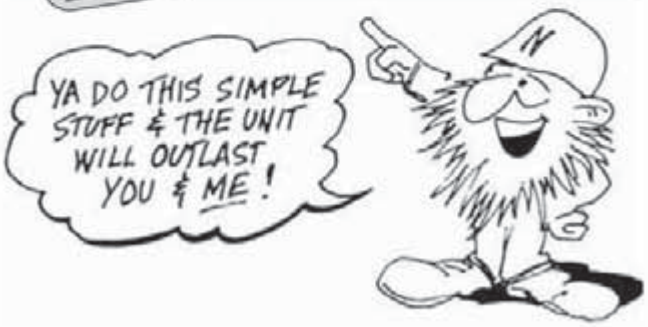

ELECTRICAL TROUBLESHOOTING

•**NOTE:** In case of electrical malfunction, refer to electrical trouble shooting guide as well as the wiring diagram.

WARNING Be sure that the main power to the unit is locked out and tagged according to OSHA regulations and local codes prior to performing any electrical work. Electrical troubleshooting and repair should be performed only by a qualified electrician.

Light Functions and Related Components

LIGHT MALFUNCTION	RELATED COMPONENTS
All	115V power to unit, fuse. transformer, upper and lower limit switch.
Outside Red	LED, upper limit switch.
Outside Green	LED, upper limit switch.
Both Outside Light	Common lead to lights, upper limit switch.
Inside Red (Flashing)	LED, lower limit switch.
Inside Red (Constant)	LED, lower limit switch.

LIGHT MALFUNCTION	RELATED COMPONENTS
Inside Green	L.E.D., lower limit switch.
Blue (Flashing)	L.E.D., lower limit switch, sensor switch.
Blue (Constant)	L.E.D., lower limit switch, sensor switch.
All Inside Lights	Common lead to lights (cover), lower limit switch.

Electrical Component Check

COMPONENT	CHECK
Fuse	Visual and continuity.
Printed Circuit Board	Visual check L.E.D. on Board.

COMPONENT	CHECK
Transformer	Disconnect and check primary continuity and secondary continuity.
Limit Switches	Disconnect and check continuity. common/ normally open, common/normally closed

Truck Lock™ 101M and 201P Series Electrical Schematic

Term	Component	Wire Color
A	Outside Light	Red
B	Outside Light	Black
C	Outside Light	Red- Labeled Green
D		
E	Outside Limit Switch- Upper	White
F	Outside Limit Switch- Upper	Red
G	Outside Limit Switch- Upper	Black
H	Inside Limit Switch-Lower	White
I	Inside Limit Switch-Lower	Red
J	Inside Limit Switch-Lower	Black
K	Sensor Switch	White
L	Sensor Switch	Red
M	Sensor Switch	Black
N	Interlock Relay	Red
O	Interlock Relay	Red
P		
Q	Remote Switch	Red
R	Remote Switch	Black
S	Solenoid Valve	Black
T	Solenoid Valve	Black

QD	Component	Wire Color / #
QD1	10V Trans	Blue 10VAC/QD/
QD2	10V Trans	Blue 10VAC/QD2
QD3		
QD4	Red Light	Red/QD4
QD5	Red Light	Red/QD5
QD6	Green Light	Red/QD6
QD7	Green Light	Red/QD7
QD8	Alarm Reset	Red/QD8
QD9	Alarm Reset	Red/QD9
QD10	Blue LED	Brn/QD10
QD11	Blue LED	Bl/Wh/QD11
QD12	Red LED	Brn/QD12
QD13	Red LED	Blue/QD13
QD14	Green LED	Brn/QD14
QD15	Green LED	Blue/QD15
QD16	Sounder	Red/QD16
QD17	Sounder	Red/QD17
QD18	Selector Switch	Red/QD18
QD19	Selector Switch	Red/QD19
QD20	Selector Switch	Red/QD20
QD21	24V Trans	Blue 24VAC/QD21
QD22	24V Trans	Blue 24VAC/QD22

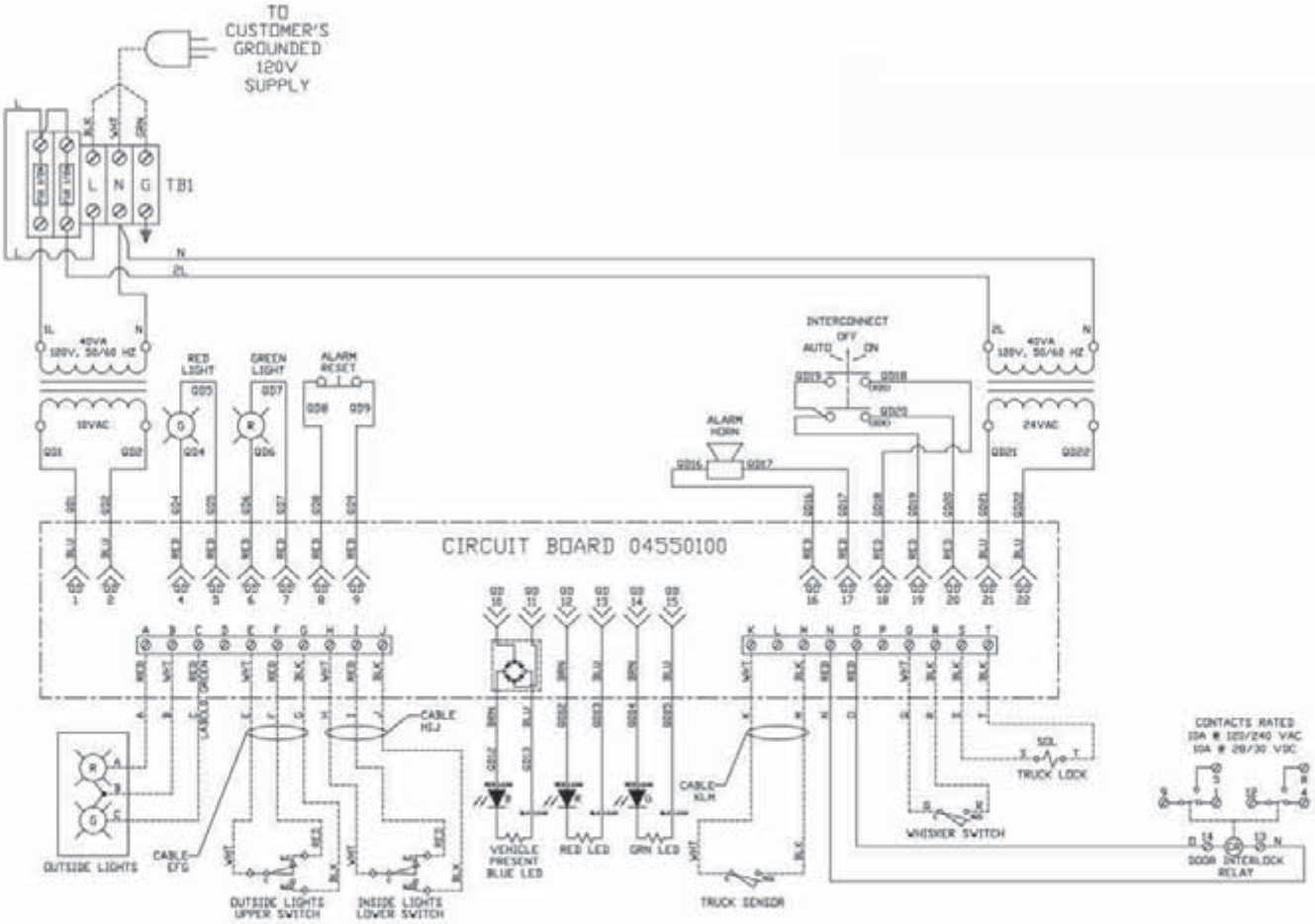

CONTROL BOX ASSEMBLY

Models 101M, 201P

Control Box Assembly

ITEM	REQ.	DESCRIPTION	PART NO.
1	1	Red Lens Only	06-0-602
2	2	Red LEDs	06-0-632
3	1	Red LED Assembly	06-0-604
4	1	Green Lens Only	06-0-008
5	2	Green LEDs	06-0-633
6	1	Green LED Assembly	06-0-609
7	1	Alarm horn with contact Block	06-0-615
8	1	Alarm Reset PB with Contact Block	06-0-616
9	1	Printed Circuit Board (LED ONLY)	06-0-671
10	1	12V Transformer	06-0-039
11	1	Terminal Block 3 Pole	06-0-605
12	1,1	Fuse Block	06-0-603
13	1,1	Fuse Puller	06-0-604
14	1,1	1/2 Amp Fuse	06-0-606
15	1	Relay 12VDC, 2PDT with Socket	06-0-608
16	1	3 Position Selector Switch	06-0-631
17	1	LED Indicator, Blue	06-0-651
18	1	24V Transformer	06-0-040

Items 15, 16, 17, & 18 are available with adders to the control box
Items 12, 13, 14, have the extra quantity listed
with adders to the controls box

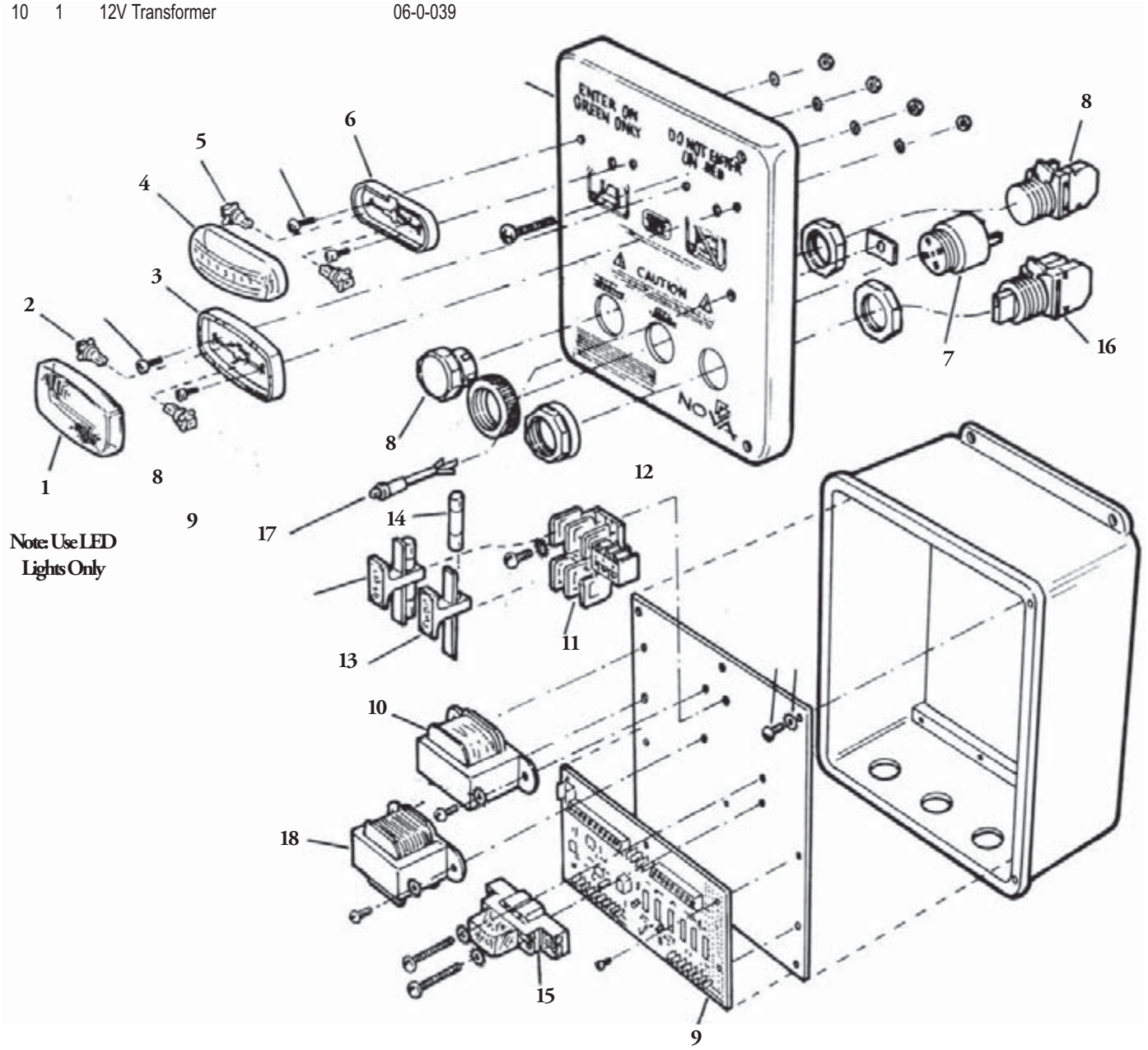

Anchor RAM & RAM HOUSING ASSEMBLY

Models 100M, 101M, 201P

ITEM	REQ.	DESCRIPTION	PART NO.
1	1	Switch Kit	15-3-001
2	1	Ram Assembly	02-3-002
3	1	Cable, 25 ft.	03-0-001
4	1	Upper Pulley Swivel Brkt. Ass'y	41-3-912
5	2	Pulley 1-1/4" dia.	03-0-002
6	2	Cotter Pin, 1/16" x 3/4"	01-0-082
7	1	Swivel Cap	41-1-902
8	2	Socket Set Screw 1/4" - 20 x 1/4"	01-0-007
9	1	Clevis Pin, Long	01-0-083
10	1	Ram Plug	02-0-010
11	2	Hex Hd. Bolt, SS 5/8" – 11 x 1"	02-0-011
12	2	Lockwasher, 5/8"	02-0-012
13	1	Hex Hd. Bolt, 3/8" – 16 x 1-1/4"	02-0-013
14	1	2" Anchor Side Extension Assy.	02-3-019
15	1	Pulley, 1-3/4" dia.	03-0-003
16	2	Hex Nut, 3/8" – 16 Nylok	01-0-016
17	2	Cotter Pin, 1/8" x 3/4"	01-0-012
18	2	Pulley, 2" dia.	03-0-004
27	1	Clevis Pin, 3/8" x 2-1/2" Lng.	02-0-016
30	1	Ram Housing Ass'y.	02-3-033
33	1	Clevis Pin, 3/8" x 1-3/8" Ing	02-0-017
34	1	2" Tail Section (Short) Assy.	02-3-017
35	1	Tail Section (Long) Assy.	02-3-008
36	4	Flange Head Bolt, 3/8" – 16 x 1" Ing.	02-0-014
37	1	Pulley Cover	31-1-105
38	1	Lower Pulley Swivel Mount	41-1-020
39	1	Lower Pulley Swivel Assy.	41-3-908
41	1	Clevis Pin	01-0-017

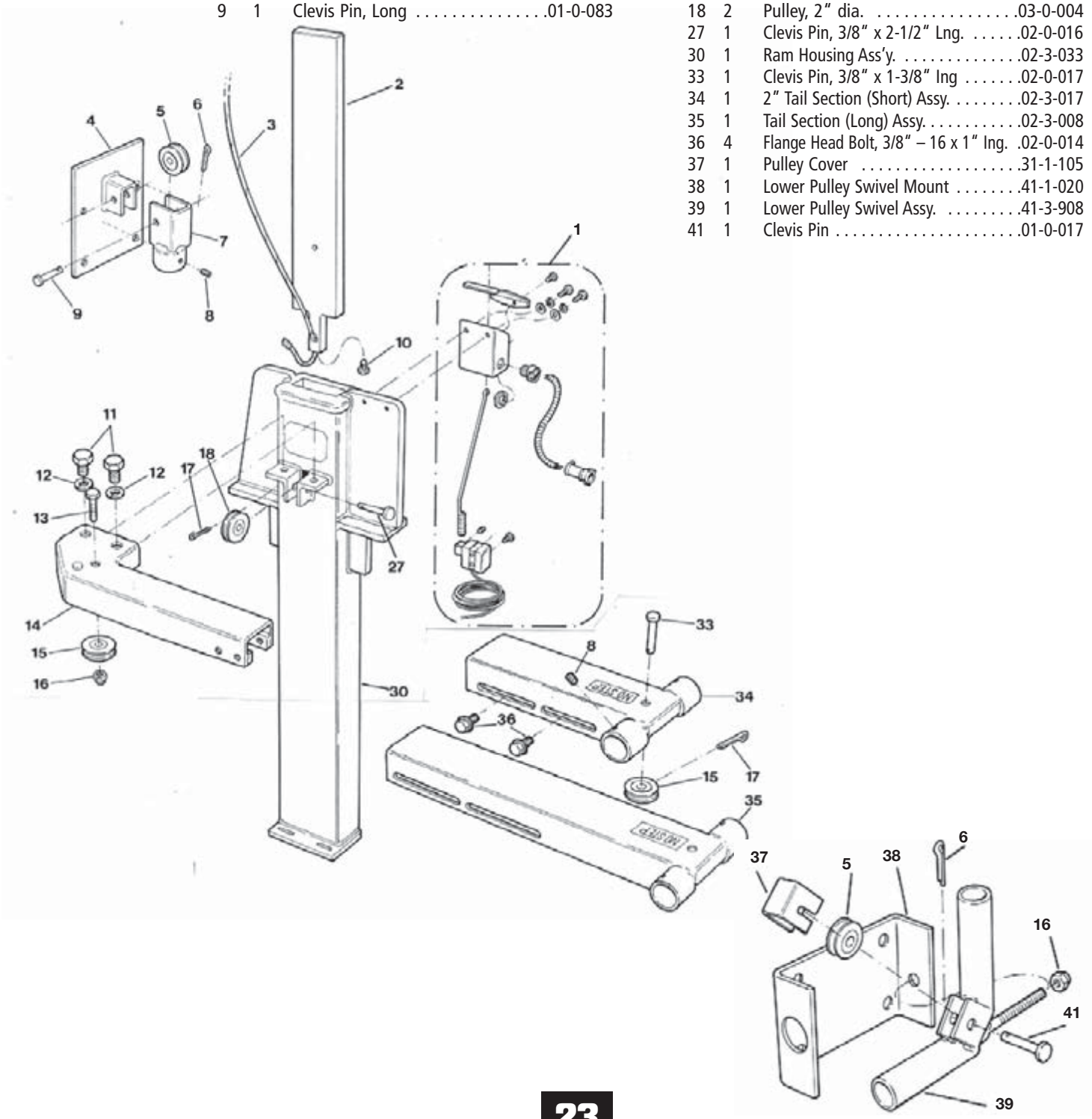

100M and 101M Console Assembly

ITEM	QTY	DESCRIPTION	PART NUMBER
1	1	Cable Clamp	03-0-007
2	1	Remote Box Cover Plate	41-1-018
4	1	2” Slide Pole Ass’y	31-3-917
5	1	Anchor Manual Cover Ass’y	02-3-004
6	2	Limit Switch	06-0-013*
7	4	Hex Head Bolt 3/8-16 x 1/2	01-0-001
8	4	Star Lock Washer 3/8	01-0-002
9	1	Extension Spring	31-0-202
10	1	Pulley 2”	03-0-004
11	1	Handel Cover	31-0-062
12	2	Round Head Screw #4-40x1/2	01-0-006*
13	1	Cotter Pin 1/8 x 3/4	01-0-012
14	1	Clevis Pin 3/8 x 1-3/8	01-0-017
15	2	Round Head Screw #4-40x1	01-0-096*
16	2	Star Lock Washer #4	01-0-097*
17	2	Hex Nut #4-40	01-0-098*
18	1	Dampener	31-1-031

*Are sold with 351M only

Items 4 and 5 are sold as assemblies only

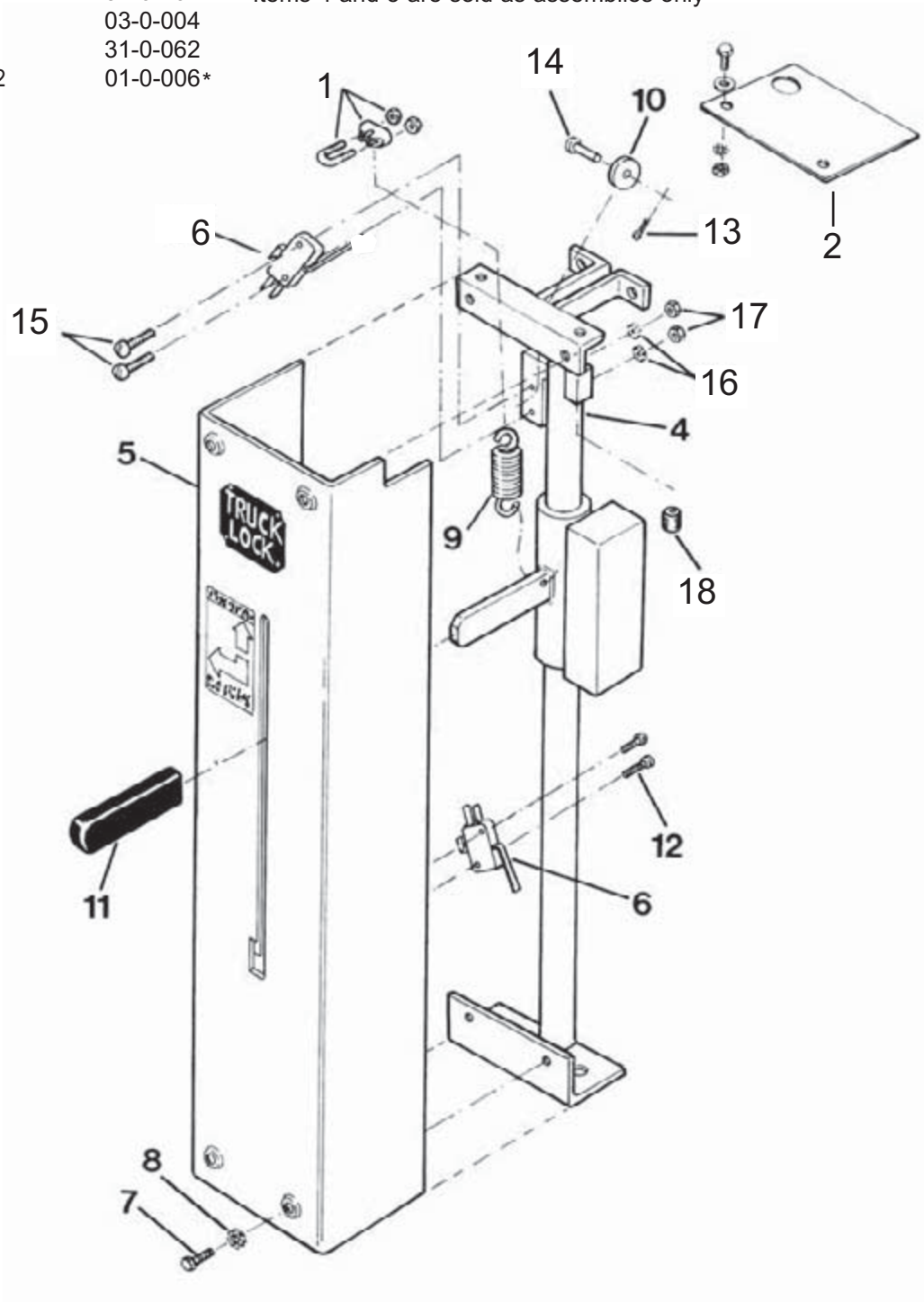

201P CONSOLE ASSEMBLY

201P and Interconnect Option Console Assembly

ITEM	QTY	DESCRIPTION	PART NUMBER
1	1	P Console Cover Ass'y	31-3-310
2	1	2" Universal Cylinder Pole Ass'y	02-3-036
3	1	12" Air Cylinder Ass'y	07-3-050
4	1	2" Rod End Ass'y	31-3-924
5	1	Remote Box Cover Plate	41-1-018
6	2	Clevis Pin 3/8 x 1-3/8	02-0-017
7	2	Cotter Pin 1/8 x3/4	01-0-012
8	1	Cable Clamp	03-0-007
9	2	Pulley 2"	03-0-004
10	1	Clevis Pin 1/4 x 1-1/4	01-0-083
11	1	Cotter Pin 1/16 x3/4	01-0-082
12	1	90 Deg Flow Control	07-0-135
13	1	26" Airline	07-0-007
14	2	Limit Switch	06-0-013
15	4	Round Head Screw #4-40x1/2	01-0-006
17	4	Star Lock Washer 3/8	01-0-002

ITEM	QTY	DESCRIPTION	PART NUMBER
18	4	Hex Head Bolt 3/8-16 x1/2	01-0-001
19	1	Rotary Valve Ass'y	07-3-132
20	1	Union Tee	07-0-017
21	1	25 Ft Airline	07-0-008
23	1	Solenoid Valve Ass'y	07-3-045
24	2	Screw #6-32 x 1	01-0-010
25	1	Remote Limit Switch	06-0-047
26	2	RH Screw 10-24 x 1-1/2	01-0-133
27	2	Lock Washer #10	01-0-131
28	2	Hex Nut #10-24	01-0-132
29	1	Vertical Mount Plate Door	40-1-005
30	1	Horiz. Mount Plate Leveler	40-1-004

Items 1, 2, 3, 4, 19 are sold as assemblies only
Items 23-30 are for interconnect options only
Keyed Rotary Valve Also Available

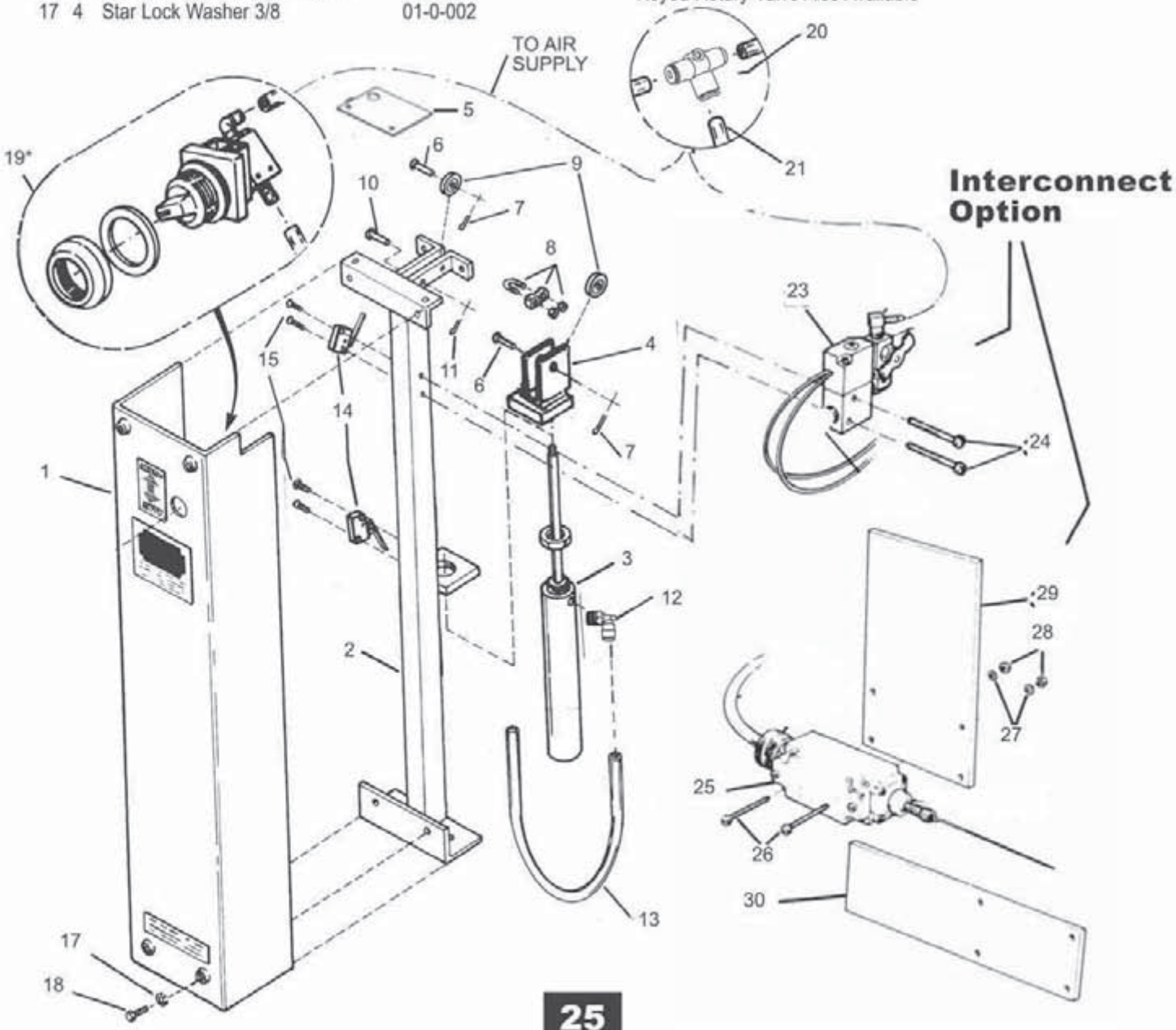

OUTSIDE LIGHT ASSEMBLY

All Models — except 100FM

ITEM	QTY	DESCRIPTION	PART NUMBER
1	1	Stop & Go Signal Light LED	06-0-700-LED
2	1	Red LED Assembly	06-0-723
3	1	Green LED Assembly	06-0-724
4	4	Screw and Clips	06-0-725
Outside Sign, Stop/Red			NT-0-106

Note: Use LED Lights Only

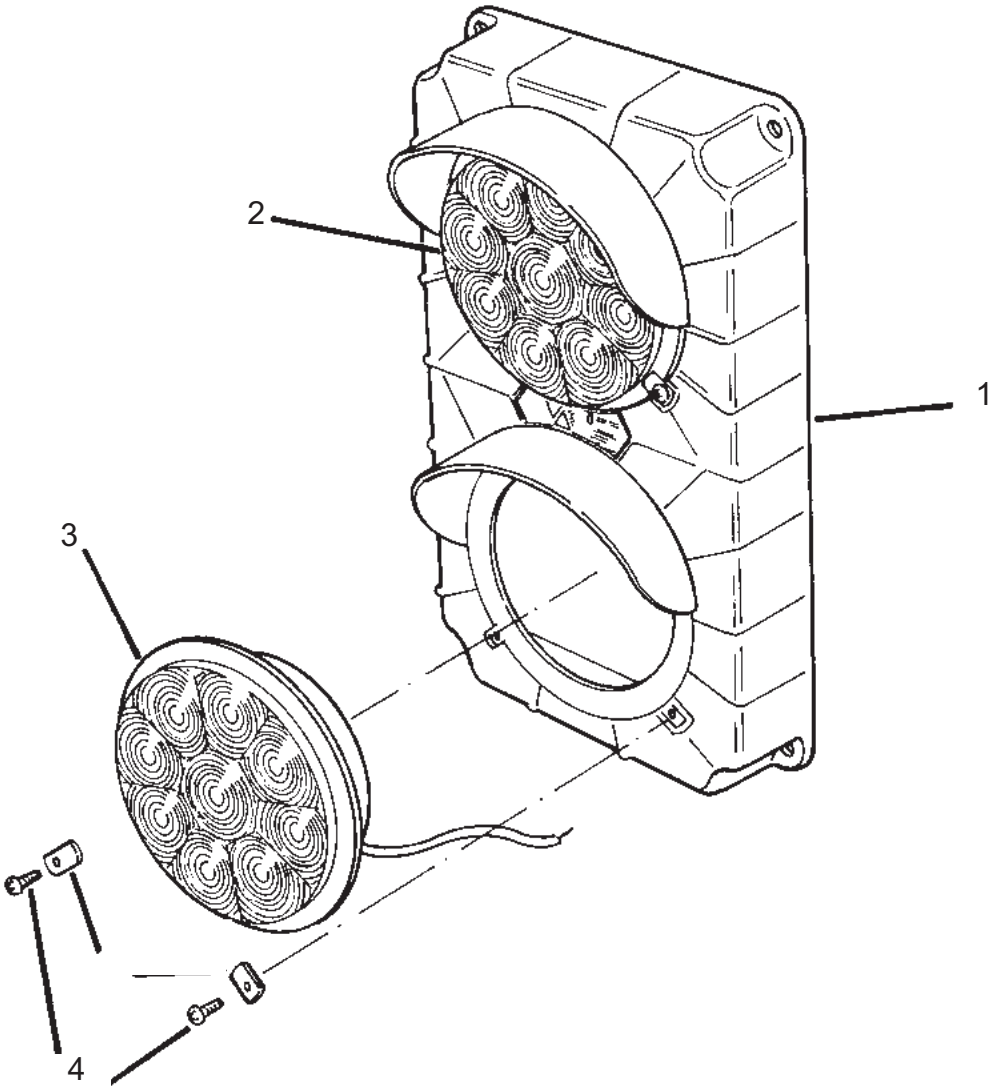

Notes/Maintenance Schedule”

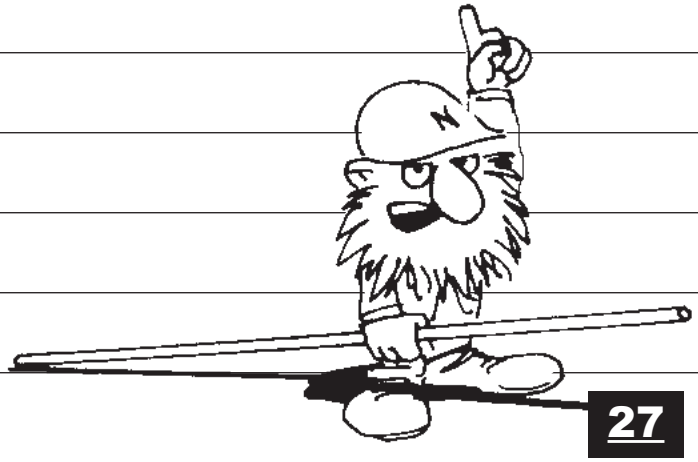

NOVA Anchor Truck Lock Manual

NOVA Technology Int'l, LLC • N90 W14507 Commerce Drive, Menomonee Falls WI 53051
Phone:262-502-1591.Toll Free:800-236-7325.Fax:262-502-1511.www.novalocks.com

Printed on Recycled Paper, Illustrations by R.F.. Schwengel